US007184059B1

(12) **United States Patent**
Fouladi et al.

(10) **Patent No.: US 7,184,059 B1**
(45) **Date of Patent: Feb. 27, 2007**

(54) **GRAPHICS SYSTEM WITH COPY OUT CONVERSIONS BETWEEN EMBEDDED FRAME BUFFER AND MAIN MEMORY**

(75) Inventors: **Farhad Fouladi**, Los Altos Hills, CA (US); **Mark M. Leather**, Saratoga, CA (US); **Robert Moore**, Heathrow, FL (US); **Howard Cheng**, Sammamish, WA (US); **Timothy J. Van Hook**, Atherton, CA (US)

(73) Assignee: **Nintendo Co., Ltd.**, Kyoto (JP)

(*) Notice: Subject to any disclaimer, the term of this patent is extended or adjusted under 35 U.S.C. 154(b) by 194 days.

(21) Appl. No.: **09/722,663**

(22) Filed: **Nov. 28, 2000**

Related U.S. Application Data

(60) Provisional application No. 60/227,030, filed on Aug. 23, 2000.

(51) **Int. Cl.**
G09G 5/02 (2006.01)
G09G 5/397 (2006.01)
G06T 1/20 (2006.01)

(52) **U.S. Cl.** **345/604**; 345/546; 345/506

(58) **Field of Classification Search** 345/519–522, 345/503, 552, 603, 563, 506, 419, 604, 546
See application file for complete search history.

(56) **References Cited**

U.S. PATENT DOCUMENTS

4,218,760 A * 8/1980 Levy 715/532
4,275,413 A 6/1981 Sakamoto et al.
4,357,624 A 11/1982 Greenberg
4,388,620 A 6/1983 Sherman
4,425,559 A 1/1984 Sherman

(Continued)

FOREIGN PATENT DOCUMENTS

CA 2070934 12/1993

(Continued)

OTHER PUBLICATIONS

GDC 2000: Advanced OpenGL Game Development, "A Practical and Robust Bump-mapping Technique for Today's GPUs," by Mark Kilgard, Jul. 5, 2000, www.nvidia.com.

(Continued)

Primary Examiner—Kee M. Tung
Assistant Examiner—Jin-Cheng Wang
(74) *Attorney, Agent, or Firm*—Nixon & Vanderhye

(57) **ABSTRACT**

A graphics system including a custom graphics and audio processor produces exciting 2D and 3D graphics and surround sound. The system includes a graphics and audio processor including a 3D graphics pipeline and an audio digital signal processor. The graphics processor includes an embedded frame buffer for storing frame data prior to sending the frame data to an external location, such as main memory. A copy pipeline is provided which converts the data from one format to another format prior to writing the data to the external location. The conversion may be from one RGB color format to another RGB color format, from one YUV format to another YUV format, from an RGB color format to a YUV color format, or from a YUV color format to an RGB color format. The formatted data is either transferred to a display buffer, for use by the video interface, or to a texture buffer, for use as a texture by the graphics pipeline in a subsequent rendering process.

18 Claims, 23 Drawing Sheets

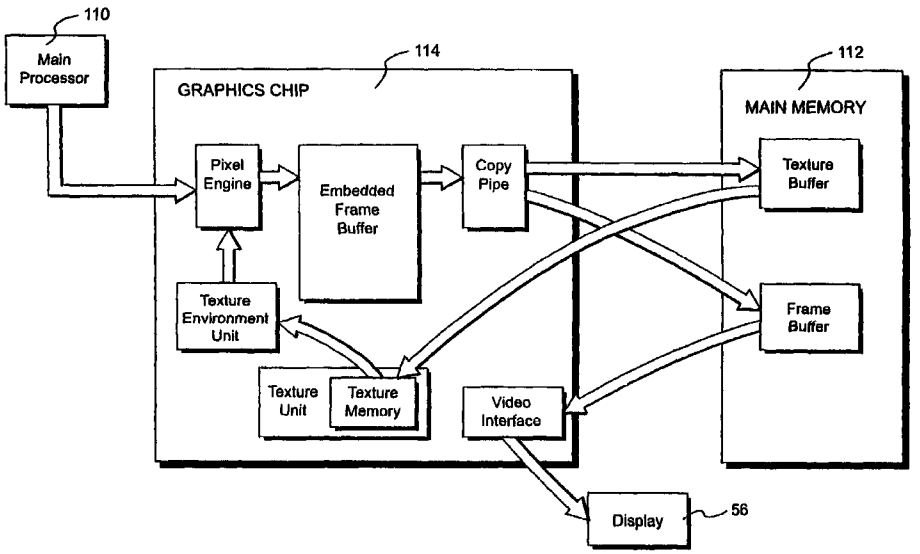

U.S. PATENT DOCUMENTS

4,463,380	A		7/1984	Hooks, Jr.
4,491,836	A		1/1985	Collmeyer et al.
4,570,233	A		2/1986	Yan et al.
4,586,038	A		4/1986	Sims et al.
4,600,919	A		7/1986	Stern
4,615,013	A		9/1986	Yan et al.
4,625,289	A		11/1986	Rockwood
4,653,012	A		3/1987	Duffy et al.
4,658,247	A		4/1987	Gharachorloo
4,692,880	A		9/1987	Merz et al.
4,695,943	A		9/1987	Keeley et al.
4,710,876	A		12/1987	Cline et al.
4,725,831	A		2/1988	Coleman
4,768,148	A		8/1988	Keeley et al.
4,785,395	A		11/1988	Keeley
4,790,025	A		12/1988	Inoue et al.
4,808,988	A		2/1989	Burke et al.
4,812,988	A		3/1989	Duthuit et al.
4,817,175	A		3/1989	Tenenbaum et al.
4,829,295	A		5/1989	Hiroyuki
4,829,452	A		5/1989	Kang et al.
4,833,601	A		5/1989	Barlow et al.
4,855,934	A		8/1989	Robinson
4,862,392	A		8/1989	Steiner
4,866,637	A		9/1989	Gonzalez-Lopez et al.
4,888,712	A		12/1989	Barkans et al.
4,897,806	A		1/1990	Cook et al.
4,901,064	A		2/1990	Deering
4,907,174	A		3/1990	Priem
4,914,729	A		4/1990	Omori et al.
4,918,625	A		4/1990	Yan
4,935,879	A		6/1990	Ueda
4,945,500	A		7/1990	Deering
4,965,751	A		10/1990	Thayer et al.
4,974,176	A		11/1990	Buchner et al.
4,974,177	A		11/1990	Nishiguchi
4,975,977	A		12/1990	Kurosu et al.
4,989,138	A		1/1991	Radochonski
5,003,496	A		3/1991	Hunt, Jr. et al.
5,016,183	A		5/1991	Shyong
5,018,076	A		5/1991	Johary et al.
5,043,922	A		8/1991	Matsumoto
5,056,044	A		10/1991	Frederickson et al.
5,062,057	A		10/1991	Blacken et al.
5,086,495	A		2/1992	Gray et al.
5,091,967	A		2/1992	Ohsawa
5,097,427	A		3/1992	Lathrop et al.
5,136,664	A		8/1992	Bersack et al.
5,144,291	A		9/1992	Nishizawa
5,163,126	A		11/1992	Einkauf et al.
5,170,468	A		12/1992	Shah et al.
5,179,638	A		1/1993	Dawson et al.
5,204,944	A		4/1993	Wolberg et al.
5,224,208	A		6/1993	Miller, Jr. et al.
5,239,624	A		8/1993	Cook et al.
5,241,658	A		8/1993	Masterson et al.
5,255,353	A		10/1993	Itoh
5,268,995	A		12/1993	Diefendorff et al.
5,268,996	A		12/1993	Steiner et al.
5,278,948	A		1/1994	Luken, Jr.
5,307,450	A		4/1994	Grosssman
5,315,692	A		5/1994	Hansen et al.
5,345,541	A		9/1994	Kelley et al.
5,353,424	A		10/1994	Partovi et al.
5,357,579	A		10/1994	Buchner et al.
5,361,386	A		11/1994	Watkins et al.
5,363,475	A		11/1994	Baker et al.
5,377,313	A		12/1994	Scheibl
5,392,385	A		2/1995	Evangelisti et al.
5,392,393	A		2/1995	Deering
5,394,516	A		2/1995	Winser
5,402,532	A		3/1995	Epstein et al.
5,404,445	A		4/1995	Matsumoto
5,408,650	A		4/1995	Arsenault
5,412,796	A		5/1995	Olive
5,415,549	A		5/1995	Logg
5,416,606	A		5/1995	Katayama et al.
5,421,028	A		5/1995	Swanson
5,422,997	A		6/1995	Nagashima
5,432,895	A		7/1995	Myers
5,432,900	A		7/1995	Rhodes et al.
5,438,663	A		8/1995	Matsumoto et al.
5,448,689	A		9/1995	Matsuo et al.
5,457,775	A		10/1995	Johnson, Jr. et al.
5,461,712	A		10/1995	Chelstowski et al.
5,467,438	A		11/1995	Nishio et al.
5,467,459	A		11/1995	Alexander et al.
5,469,535	A		11/1995	Jarvis et al.
5,473,736	A		12/1995	Young
5,475,803	A		12/1995	Stearns et al.
5,487,146	A		1/1996	Guttag et al.
5,490,240	A		2/1996	Foran et al.
5,495,563	A		2/1996	Winser
5,504,499	A		4/1996	Horie et al.
5,504,917	A		4/1996	Austin
5,506,604	A	*	4/1996	Nally et al. 345/603
5,535,374	A		7/1996	Olive
5,543,824	A		8/1996	Priem et al.
5,544,292	A		8/1996	Winser
5,548,709	A		8/1996	Hannah et al.
5,553,228	A		9/1996	Erb et al.
5,557,712	A		9/1996	Guay
5,559,954	A		9/1996	Sakoda et al.
5,561,746	A		10/1996	Murata et al.
5,561,752	A		10/1996	Jevans
5,563,989	A		10/1996	Billyard
5,566,285	A		10/1996	Okada
5,573,402	A		11/1996	Gray
5,579,456	A		11/1996	Cosman
5,586,234	A		12/1996	Sakuraba et al.
5,593,350	A		1/1997	Bouton et al.
5,594,854	A		1/1997	Baldwin et al.
5,600,763	A		2/1997	Greene et al.
5,606,650	A		2/1997	Kelley et al.
5,607,157	A		3/1997	Nagashima
5,608,424	A		3/1997	Takahashi et al.
5,608,864	A		3/1997	Bindlish et al.
5,616,031	A		4/1997	Logg
5,621,867	A		4/1997	Murata et al.
5,628,686	A		5/1997	Svancarek et al.
5,638,535	A		6/1997	Rosenthal et al.
5,644,364	A		7/1997	Kurtze et al.
5,649,082	A		7/1997	Burns
5,650,955	A		7/1997	Puar et al.
5,651,104	A		7/1997	Cosman
5,657,045	A		8/1997	Katsura et al.
5,657,443	A		8/1997	Krech, Jr.
5,657,478	A		8/1997	Recker et al.
5,659,671	A		8/1997	Tannenbaum et al.
5,659,673	A		8/1997	Nonoshita
5,659,715	A		8/1997	Wu et al.
5,664,162	A		9/1997	Dye
5,666,439	A		9/1997	Ishida et al.
5,678,037	A		10/1997	Osugi et al.
5,682,522	A		10/1997	Huang et al.
5,684,941	A		11/1997	Dye
5,687,304	A		11/1997	Kiss
5,687,357	A		11/1997	Priem
5,691,746	A		11/1997	Shyu
5,694,143	A		12/1997	Fielder et al.
5,696,892	A		12/1997	Redmann et al.
5,701,444	A		12/1997	Baldwin
5,703,806	A		12/1997	Puar et al.
5,706,481	A		1/1998	Hannah et al.

5,706,482 A 1/1998 Matsushima et al.
5,714,981 A 2/1998 Scott-Jackson et al.
5,721,947 A 2/1998 Priem et al.
5,724,561 A 3/1998 Tarolli et al.
5,726,689 A 3/1998 Negishi et al.
5,726,947 A 3/1998 Yamazaki et al.
5,727,192 A 3/1998 Baldwin
5,734,386 A 3/1998 Cosman
5,739,819 A 4/1998 Bar-Nahum
5,740,343 A 4/1998 Tarolli et al.
5,740,383 A 4/1998 Nally et al.
5,740,406 A 4/1998 Rosenthal et al.
5,742,749 A 4/1998 Foran et al.
5,742,788 A 4/1998 Priem et al.
5,745,118 A 4/1998 Alcorn et al.
5,745,125 A 4/1998 Deering et al.
5,748,199 A 5/1998 Palm
5,748,986 A 5/1998 Butterfield et al.
5,751,291 A 5/1998 Olsen et al.
5,751,292 A 5/1998 Emmot
5,751,295 A 5/1998 Becklund et al.
5,751,930 A 5/1998 Katsura et al.
5,754,191 A 5/1998 Mills et al.
5,757,382 A 5/1998 Lee
5,758,182 A 5/1998 Rosenthal et al.
5,760,783 A 6/1998 Migdal et al.
5,764,228 A 6/1998 Baldwin
5,764,237 A 6/1998 Kaneko
5,764,243 A 6/1998 Baldwin
5,767,856 A 6/1998 Peterson et al.
5,767,858 A 6/1998 Kawase et al.
5,768,626 A 6/1998 Munson et al.
5,768,629 A 6/1998 Wise et al.
5,774,133 A 6/1998 Neave et al.
5,777,623 A 7/1998 Small
5,777,629 A 7/1998 Baldwin
5,781,927 A 7/1998 Wu et al.
5,791,994 A 8/1998 Hirano et al.
5,798,770 A 8/1998 Baldwin
5,801,706 A 9/1998 Fujita et al.
5,801,711 A 9/1998 Koss et al.
5,801,716 A 9/1998 Silverbrook
5,801,720 A 9/1998 Norrod et al.
5,805,175 A 9/1998 Priem
5,805,868 A 9/1998 Murphy
5,808,619 A 9/1998 Choi et al.
5,808,630 A 9/1998 Pannell
5,809,219 A 9/1998 Pearce et al.
5,809,278 A 9/1998 Watanabe et al.
5,815,165 A 9/1998 Blixt
5,815,166 A 9/1998 Baldwin
5,818,456 A 10/1998 Cosman et al.
5,819,017 A 10/1998 Akeley et al.
5,821,940 A 10/1998 Morgan et al.
5,821,949 A 10/1998 Deering
5,822,516 A 10/1998 Krech, Jr.
5,828,382 A 10/1998 Wilde
5,828,383 A 10/1998 May et al.
5,828,907 A 10/1998 Wise et al.
5,831,624 A 11/1998 Tarolli et al.
5,831,625 A 11/1998 Rich et al.
5,831,640 A 11/1998 Wang et al.
5,835,096 A 11/1998 Baldwin
5,835,792 A 11/1998 Wise et al.
5,838,334 A 11/1998 Dye
5,844,576 A 12/1998 Wilde et al.
5,850,229 A 12/1998 Edelsbrunner et al.
5,852,451 A 12/1998 Cox et al.
5,856,829 A 1/1999 Gray, III et al.
5,859,645 A 1/1999 Latham
5,861,888 A 1/1999 Dempsey
5,861,893 A 1/1999 Strugess
5,867,166 A 2/1999 Myhrvold et al.
5,870,097 A 2/1999 Snyder et al.
5,870,098 A 2/1999 Gardiner
5,870,102 A 2/1999 Tarolli et al.
5,870,109 A 2/1999 McCormack et al.
5,870,587 A 2/1999 Danforth et al.
5,872,902 A 2/1999 Kuchkuda et al.
5,874,969 A 2/1999 Storm et al.
5,877,741 A 3/1999 Chee et al.
5,877,770 A 3/1999 Hanaoka
5,877,771 A 3/1999 Drebin et al.
5,880,736 A 3/1999 Peercy et al.
5,880,737 A 3/1999 Griffen et al.
5,883,638 A 3/1999 Rouet et al.
5,886,701 A 3/1999 Chauvin et al.
5,886,705 A 3/1999 Lentz
5,887,155 A 3/1999 Laidig
5,890,190 A 3/1999 Rutman
5,892,517 A 4/1999 Rich
5,892,974 A 4/1999 Koizumi et al.
5,894,300 A 4/1999 Takizawa
5,900,881 A 5/1999 Ikedo
5,903,283 A 5/1999 Selwan et al.
5,909,218 A 6/1999 Naka et al.
5,909,225 A 6/1999 Schinnerer et al.
5,912,675 A 6/1999 Laperriere
5,912,676 A 6/1999 Malladi et al.
5,914,721 A 6/1999 Lim
5,914,725 A 6/1999 McInnnis et al.
5,914,729 A 6/1999 Lippincott
5,917,496 A 6/1999 Fujita et al.
5,920,326 A 7/1999 Rentschler et al.
5,920,876 A 7/1999 Ungar et al.
5,923,332 A 7/1999 Izawa
5,923,334 A 7/1999 Luken
5,926,182 A 7/1999 Menon et al.
5,926,647 A 7/1999 Adams et al.
5,933,150 A 8/1999 Ngo et al.
5,933,154 A 8/1999 Howard et al.
5,933,155 A 8/1999 Akeley
5,933,529 A 8/1999 Kim
5,936,641 A 8/1999 Jain et al.
5,936,683 A 8/1999 Lin
5,940,086 A 8/1999 Rentschler et al.
5,940,089 A 8/1999 Dilliplane
5,940,538 A 8/1999 Spiegel et al.
5,943,058 A 8/1999 Nagy
5,943,060 A 8/1999 Cosman et al.
5,945,997 A 8/1999 Zhao et al.
5,949,421 A 9/1999 Ogletree et al.
5,949,423 A 9/1999 Olsen
5,949,424 A 9/1999 Cabral et al.
5,949,428 A 9/1999 Toelle et al.
5,949,440 A 9/1999 Krech, Jr. et al.
5,956,042 A 9/1999 Tucker et al.
5,956,043 A 9/1999 Jensen
5,958,020 A 9/1999 Evoy et al.
5,959,640 A 9/1999 Rudin et al.
5,963,220 A 10/1999 Lee et al.
5,966,134 A 10/1999 Arias
5,969,726 A 10/1999 Rentschler et al.
5,977,960 A * 11/1999 Nally et al. 345/563
5,977,979 A 11/1999 Clough et al.
5,977,984 A 11/1999 Omori
5,982,376 A 11/1999 Abe et al.
5,982,390 A 11/1999 Stoneking et al.
5,986,659 A 11/1999 Gallery et al.
5,986,663 A 11/1999 Wilde
5,986,677 A 11/1999 Jones et al.
5,987,567 A * 11/1999 Rivard et al. 345/552
5,990,903 A 11/1999 Donovan
5,995,120 A 11/1999 Dye
5,995,121 A 11/1999 Alcokrn et al.
5,999,189 A 12/1999 Kajiya et al.

5,999,196 A 12/1999 Storm et al.
5,999,198 A 12/1999 Horan et al.
6,002,407 A 12/1999 Fadden
6,002,409 A 12/1999 Harkin
6,002,410 A 12/1999 Battle
6,005,582 A 12/1999 Gabriel et al.
6,005,583 A 12/1999 Morrison
6,005,584 A 12/1999 Kitamura et al.
6,007,428 A 12/1999 Nishiumi et al.
6,008,820 A 12/1999 Chauvin et al.
6,011,562 A 1/2000 Gagne et al.
6,011,565 A 1/2000 Kuo et al.
6,014,144 A 1/2000 Nelson et al.
6,016,150 A 1/2000 Lengyel et al.
6,016,151 A 1/2000 Lin
6,018,350 A 1/2000 Lee et al.
6,020,931 A 2/2000 Bilbrey et al.
6,021,417 A 2/2000 Massarksy
6,022,274 A 2/2000 Takeda et al.
6,023,261 A 2/2000 Ugajin
6,023,738 A 2/2000 Priem et al.
6,025,853 A 2/2000 Baldwin
6,026,182 A 2/2000 Lee et al.
6,026,478 A * 2/2000 Dowling 712/24
6,028,608 A 2/2000 Jenkins
6,028,611 A 2/2000 Anderson et al.
6,031,542 A 2/2000 Wittig
6,035,360 A 3/2000 Doidge et al.
6,037,948 A 3/2000 Liepa
6,037,949 A 3/2000 DeRose et al.
6,038,031 A 3/2000 Murphy
6,038,348 A 3/2000 Carley
6,040,843 A 3/2000 Monroe et al.
6,040,844 A 3/2000 Yamaguchi et al.
6,041,010 A 3/2000 Puar et al.
6,043,804 A 3/2000 Greene
6,043,821 A 3/2000 Sprague et al.
6,046,746 A 4/2000 Deering
6,046,747 A 4/2000 Saunders et al.
6,046,752 A 4/2000 Kirkland et al.
6,049,337 A 4/2000 Van Overveld
6,049,338 A 4/2000 Anderson et al.
6,052,125 A 4/2000 Gardiner et al.
6,052,126 A 4/2000 Sakuraba et al.
6,052,127 A 4/2000 Vaswani et al.
6,052,129 A 4/2000 Fowler et al.
6,052,133 A 4/2000 Kang
6,054,993 A 4/2000 Devic et al.
6,054,999 A 4/2000 Strandberg
6,057,847 A 5/2000 Jenkins
6,057,849 A 5/2000 Haubner et al.
6,057,851 A 5/2000 Luken et al.
6,057,852 A 5/2000 Krech, Jr.
6,057,859 A 5/2000 Handelman et al.
6,057,861 A 5/2000 Lee et al.
6,057,862 A 5/2000 Margulis
6,057,863 A 5/2000 Olarig
6,061,462 A 5/2000 Tostevin et al.
6,064,392 A 5/2000 Rohner
6,067,098 A 5/2000 Dye
6,070,204 A 5/2000 Poisner
6,072,496 A 6/2000 Guenter et al.
6,075,543 A 6/2000 Akeley
6,075,546 A 6/2000 Hussain et al.
6,078,311 A 6/2000 Pelkey
6,078,333 A 6/2000 Wittig et al.
6,078,334 A 6/2000 Hanaoka et al.
6,078,338 A 6/2000 Horan et al.
6,081,274 A 6/2000 Shiraishi
6,088,035 A 7/2000 Sudarsky et al.
6,088,042 A 7/2000 Handelman et al.
6,088,487 A 7/2000 Kurashige
6,088,701 A 7/2000 Whaley et al.
6,091,431 A 7/2000 Saxena et al.
6,092,124 A 7/2000 Priem et al.
6,092,158 A 7/2000 Harriman et al.
6,094,200 A 7/2000 Olsen et al.
6,097,435 A 8/2000 Stanger et al.
6,097,437 A 8/2000 Hwang
6,104,415 A 8/2000 Gossett
6,104,417 A 8/2000 Nielsen et al.
6,105,094 A 8/2000 Lindeman
6,108,743 A 8/2000 Debs et al.
6,111,582 A 8/2000 Jenkins
6,111,584 A 8/2000 Murphy
6,115,047 A 9/2000 Deering
6,115,049 A 9/2000 Winner et al.
6,118,462 A 9/2000 Margulis
6,128,026 A 10/2000 Brothers, III
6,144,365 A 11/2000 Young et al.
6,144,387 A 11/2000 Liu et al.
6,151,602 A 11/2000 Hejlsberg et al.
6,155,926 A 12/2000 Miyamoto et al.
6,157,387 A 12/2000 Kotani
6,166,748 A 12/2000 Van Hook et al.
6,172,678 B1 1/2001 Shiraishi
6,173,367 B1 1/2001 Aleksic et al.
6,177,944 B1 1/2001 Fowler et al.
6,181,352 B1 1/2001 Kirk et al.
6,191,794 B1 2/2001 Priem et al.
6,198,488 B1 3/2001 Lindholm et al.
6,200,253 B1 3/2001 Nishiumi et al.
6,204,851 B1 3/2001 Netschke et al.
6,215,496 B1 4/2001 Szeliski et al.
6,215,497 B1 4/2001 Leung
6,226,012 B1 5/2001 Priem et al.
6,226,713 B1 5/2001 Mehrotra
6,232,981 B1 5/2001 Gossett
6,236,413 B1 5/2001 Gossett et al.
6,239,810 B1 5/2001 Van Hook et al.
6,252,608 B1 6/2001 Snyder et al.
6,252,610 B1 6/2001 Hussain
6,264,558 B1 7/2001 Nishiumi et al.
6,268,861 B1 7/2001 Sanz-Pastor et al.
6,275,235 B1 8/2001 Morgan, III
6,285,779 B1 9/2001 Lapidous et al.
6,292,194 B1 9/2001 Powll, III
6,329,997 B1 12/2001 We et al.
6,331,856 B1 12/2001 Van Hook et al.
6,339,428 B1 1/2002 Fowler et al.
6,342,892 B1 1/2002 Van Hook et al.
6,353,438 B1 3/2002 Van Hook
6,356,497 B1 3/2002 Puar et al.
6,384,831 B1 * 5/2002 Nakamura et al. 345/503
6,408,362 B1 6/2002 Arimilli et al.
6,417,858 B1 7/2002 Bosch et al.
6,426,747 B1 7/2002 Hoppe et al.
6,426,753 B1 * 7/2002 Migdal 345/506
6,437,781 B1 8/2002 Tucker et al.
6,459,429 B1 10/2002 Deering
6,466,223 B1 10/2002 Dorbie et al.
6,469,707 B1 10/2002 Voorhies
6,476,808 B1 11/2002 Kuo et al.
6,476,822 B1 11/2002 Burbank
6,496,187 B1 12/2002 Deering et al.
6,532,018 B1 * 3/2003 Chen et al. 345/519
6,650,327 B1 * 11/2003 Airey et al. 345/422
6,747,642 B1 * 6/2004 Yasumoto 345/419

FOREIGN PATENT DOCUMENTS

EP 0 637 813 A2 2/1995
EP 1 074 945 2/2001
EP 1 075 146 2/2001
EP 1 081 649 3/2001
JP 9-330230 12/1997

JP	11053580	2/1999
JP	11076614	3/1999
JP	11161819	6/1999
JP	11203500	7/1999
JP	11226257	8/1999
JP	11259671	9/1999
JP	11259678	9/1999
JP	2000-66985	3/2000
JP	2000-92390	3/2000
JP	2000-132704	5/2000
JP	2000-132706	5/2000
JP	2000-149053	5/2000
JP	2000-156875	6/2000
JP	2000-182077	6/2000
JP	2000-207582	7/2000
JP	2000-215325	8/2000
WO	WO/93/04429	3/1993
WO	WO 94/10641	5/1994

OTHER PUBLICATIONS

Technical Presentations: "Texture Space Bump Mapping," Sim Dietrich, Nov. 10, 2000, www.nvidia.com.
Whitepapers: "Texture Addressing," Sim Dietrich, Jan. 6, 2000, www.nvidia.com.
White paper, Huddy, Richard, "The Efficient Use of Vertex Buffers," (Nov. 1, 2000).
White paper, Spitzer, John, et al., "Using GL_NV_array_range and GL_NV_Fence on GEForce Products and Beyond" (Aug. 1, 2000).
White paper, Rogers, Douglas H., "Optimizing Direct3D for the GeForce 256" (Jan. 3, 2000).
Hook, Brian, "An Incomplete Guide to Programming DirectDraw and Direct3D Immediate Mode (Release 0.46)," printed from web site: www.wksoftware.com, 42 pages.
Thompson, Tom, "Must-See 3-D Engines," Byte Magazine, printed from web site www.byte.com, 10 pages (Jun. 1996).
Thompson, Nigel, "Rendering with Immediate Mode," Microsoft Interactive Developer Column: Fun and Games, printed from web site msdn.microsoft.com, 8 pages (Mar. 1997).
"HOWTO: Animate Textures in Direct3D Immediate Mode," printed from web site support.microsoft.com, 3 pages (last reviewed Dec. 15, 2000).
INFO: Rendering a Triangle Using an Execute Buffer, printed from web site support.microsoft.com, 6 pages (last reviewed Oct. 20, 2000).
U.S. Appl. No. 09/337,293, filed Jun. 21, 1999, Multi-Format Vertex Data Processing Apparatus and Method [issued as U.S. Patent No. 6,501,479 B1, on Dec. 31, 2002].
Datasheet, SGS-Thomson Microelectronics, nVIDIA™, RIVA 128™ 128-Bit 3D Multimedia Accelerator (Oct. 1997).
Product Presentation, "RIVA128™ Leadership 3D Acceleration," 2 pages.
ZDNet Reviews, from PC Magazine, "Other Enhancements," Jan. 15, 1999, wysiwyg://16/http://www4.zdnet.com...ies/reviews/0,4161,2188286,00.html.
ZDNet Reviews, from PC Magazine, "Screen Shot of Alpha-channel Transparency," Jan. 15, 1999, wysiwyg://16/http://www4.zdnet.com...ies/reviews/0,4161,2188286,00.html.
Alpha (transparency) Effects, Future Technology Research Index, http://www.futuretech.vuurwerk.n1/aplha.html.
Blythe, David, 5.6 Transparency Mapping and Trimming with Alpha, http://toolbox.sgi.com/TasteOfDT/d...penGL/advanced98/notes/node41.html, Jun. 11, 1998.
10.2 Alpha Blending, http://www.sgi.com/software/opengl/advanced98/notes/node146.html.
10.3 Sorting, http://www.sgi.com/software/opengl/advanced98/notes/node147.html.
10.4 Using the Alpha Function, http://www.sgi.com/software/opengl/advanced98/notes/node148.html.
Winner, Stephanie, et al., "Hardware Accelerated Rendering Of Antialiasing Using A Modified A-buffer Algorithm," Computer Graphics Proceedings, Annual Conference Series, 1997, pp. 307-316.
Debevec, Paul, et al., "Efficient View-Dependent Image-Based Rendering with Projective Texture-Mapping," University of California at Berkeley.
Gibson, Simon, et al., "Interactive Rendering with Real-World Illumination," Rendering Techniques 2000; 11th Eurographics Workshop on Rendering, pp. 365-376 (Jun. 2000).
Segal, Mark, et al., "Fast Shadows and Lighting Effects Using Texture Mapping," Computer Graphics, 26, 2, pp. 249-252 (Jul. 1992).
White paper, Kilgard, Mark J., "Improving Shadows and Reflections via the Stencil Buffer"(Nov. 3, 1999).
"OpenGL Projected Textures," from web site:HTTP://reality.sgi.com, 5 pages.
"5.13.1 How to Project a Texture," from web site: www.sgi.com, 2 pages.
Arkin, Alan, email, subject: "Texture distortion problem," from web site: HTTP://reality.sgi.com (Jul. 1997).
Moller, Tomas et al., "Real-Time Rendering," pp. 179-183 (AK Peters Ltd., 1999).
Williams, Lance, "Casting Curved Shadows on Curved Surfaces," Computer Graphics (SIGGRAPH '78 Proceedings), vol. 12, No. 3, pp. 270-274 (Aug. 1978).
Woo et al., "A Survey of Shadow Algorithms," IEEE Computer Graphics and Applications, vol. 10, No. 6, pp. 13-32 (Nov. 1990).
Heidrich et al., "Applications of Pixel Textures in Visualization and Realistic Image Synthesis," Proceedings 1999 Symposium On Interactive 3D Graphics, pp. 127-134 (Apr. 1999).
Hourcade et al, "Algorithms for Antialiased Cast Shadows", Computers and Graphics, vol. 9, No. 3, pp. 260-265 (1985).
Michael McCool, "Shadow Volume Reconstruction from Depth Maps", ACM Transactions on Graphics, vol. 19, No. 1, Jan. 2000, pp. 1-26.
RenderMan Artist Tools, PhotoRealistic RenderMan 3.8 User's Manual, Pixar (Aug. 1998).
RenderMan Interface Version 3.2 (Jul. 2000).
White paper, Dietrich, Sim, "Cartoon Rendering and Advanced Texture Features of the GeForce 256 Texture Matrix, Projective Textures, Cube Maps, Texture Coordinate Generation and DOTPRODUCT3 Texture Blending" (Dec. 16, 1999).
Peter J. Kovach, Inside Direct 3D, "Alpha Testing," pp. 289-291 (1999).
Web site information, CartoonReyes, REM Infografica, http://www.digimotion.co.uk/cartoonreyes.htm.
Raskar, Ramesh et al., "Image Precision Silhouette Edges," Symposium on Interactive 3D Graphics 1999, Atlanta, 7 pages (Apr. 26-29, 1999).
Schlechtweg, Stefan et al., Rendering Line-Drawings with Limited Resources, Proceedings of GRAPHICON '96, 6th International Conference and Exhibition on Computer Graphics and Visualization in Russia, (St. Petersburg, Jul. 1-5, 1996) vol. 2, pp. 131-137.
Haeberli, Paul et al., "Texture Mapping as a Fundamental Drawing Primitive," Proceedings of the Fourth Eurographics Workshop on Rendering, 11pages, Paris, France (Jun. 1993).
Schlechtweg, Stefan et al., "Emphasising in Line-drawings," Norsk samarbeid innen grafisk databehandling: NORSIGD Info, medlemsblad for NORSIGD, Nr 1/95, pp. 9-10.
Markosian, Lee et al., "Real-Time Nonphotorealistic Rendering," Brown University site of the NSF Science and Technology Center for Computer Graphics and Scientific Visualization, Providence, RI, 5 pages (undated).
Feth, Bill, "Non-Photorealistic Rendering," wif3@cornell.edu, CS490—Bruce Land, 5 pages (Spring 1998).
Elber, Gershon, "Line Art Illustrations of Parametric and Implicit Forms," IEEE Transactions on Visualization and Computer Graphics, vol. 4, No. 1, Jan.-Mar. 1998.
Zeleznik, Robert et al."SKETCH: An Interface for Sketching 3D Scenes," Computer Graphics Proceedings, Annual Conference Series 1996, pp. 163-170.
Computer Graphics World, Dec. 1997.

Reynolds, Craig, "Stylized Depiction in Computer Graphics, Non-Photorealistic, Painterly and 'Toon Rendering," an annotated survey of online resources, 13 pages, last update May 30, 2000, http://www.red.com/cwr/painterly.html.
Render Man Artist Tools, Using Arbitrary Output Variables in Photorealistic Renderman (With Applications), PhotoRealistic Renderman Application Note #24, 8 pages, Jun. 1998, http://www.pixar.com/products/renderman/toolkit/Toolkit/AppNotes/appnote.24.html.
Decaudin, Philippe, "Cartoon-Looking Rendering of 3D Scenes," Syntim Project Inria, 6 pages, http://www-syntim.inria.fr/syntim/recherche/decaudin/cartoon-eng.html.
Hachigian, Jennifer, "Super Cel Shader 1.00 Tips and Tricks," 2 pages, wysiwyg://thePage.13/http://members.xoom.com/_XMCM.jarvia/3D/celshade.html.
Digimation Inc., "The Incredible Comicshop," info sheet, 2 pages, http://www.digimation.com/asp/product/asp?product_id=33.
Softimage/3D Full Support, "Toon Assistant," 1998 Avid Technology, Inc., 1 page, http://www.softimage.com/3dsupport/techn...uments/3.8/features3.8/rel_notes.56.html.
Cambridge Animo—Scene III, info sheet, Cambridge Animation Systems, 2 pages, http://www.cam-ani.co.uk/casweb/products/software/SceneIII.htm.
Mulligan, Vikram, "Toon," info sheet, 2 pages, http://digitalcarversguild.com/products/toon/toon.thml.
Toony Shaders, "Dang I'm tired of photorealism," 4 pages, http://www.visi.com/—mcdonald/toony.html.
"Cartoon Shading, Using Shading Mapping," 1 page, http://www.goat.com/alias/shaders.html#toonshad.
Web site Information, CartoonReyes, http://www.zentertainment.com/zentropy/review/cartoonreyes.html.
VIDI Presenter 3D Repository, "Shaders." 2 pages, http://www.webnation.com/vidirep/panels/renderman/shaders/toon.phtml.
The RenderMan Interface Version 3.1, (Sep. 1989).
Renderman Artist Tools, PhotoRealistic RenderMan Tutorial, Pixar (Jan. 1996).
Web site materials, "Renderman Artist Tools, PhotoRealistic RenderMan 3.8 User's Manual," Pixar.
NVIDIA.com, technical presentation, "AGDC Per-Pixel Shading" (Nov. 15, 2000).
NVIDIA.com, technical presentation, Introduction to DX8 Pixel Shaders (Nov. 10, 2000).
NVIDIA.com, technical presentation, "Advanced Pixel Shader Details" (Nov. 10, 2000).
"Developer's Lair, Multitexturing with the ATI Rage Pro," (7 pages) from ati.com web site (2000).
Slide Presentation, Sébastien Dominé, "nVIDIA Mesh Skinning, OpenGl".
Singh, Karan et al., "Skinning Characters using Surface-Oriented Free-Form Deformations," Toronto Canada.
"Hardware Technology," from ATI.com web site, 8 pages (2000).
"Skeletal Animation and Skinning," from ATI.com web site, 2 pages (Summer 2000).
"Developer Relations, ATI Summer 2000 Developer Newsletter," from ATI.com web site, 5 pages (Summer 2000).
Press Releases, "ATI's RADEON family of products delivers the most comprehensive support for the advance graphics features of DirectX 8.0," Canada, from ATI.com web site, 2 pages (Nov. 9, 2000).
"ATI RADEON Skinning and Tweening," from ATI.com web site, 1 page (2000).
Hart, Evan et al., "Vertex Shading with Direct3D and OpenGL," Game Developers Conference 2001, from ATI.com web site (2001).
Search Results for: skinning, from ATI.com web site, 5 pages (May 24, 2001).
Hart, Evan et al., "Graphics by rage," Game Developers Conference 2000, from ATI.com web site (2000).
Efficient Command/Data Interface Protocol For Graphics, IBM TDB, vol. 36, issue 9A, Sep. 1, 1993, pp. 307-312.
Shade, Jonathan et al., "Layered Depth Images," Computer Graphics Proceedings, Annual Conference Series, pp. 231-242 (1998).
Videum Conference Pro (PCI) Specification, product of Winnov (Winnov), published Jul. 21, 1999.
Hoppe, Hugues, "Optimization of Mesh Locality for Transparent Vertex Caching," Proceedings of Siggraph, pp. 269-276 (Aug. 8-13, 1999).
Whitepaper: Implementing Fog in Direct3D, Jan. 3, 2000, www.nvidia.com.
Akeley, Kurt, "Reality Engine Graphics", 1993, Silicon Graphics Computer Systems, pp. 109-116.
Photograph of Sony PlayStation II System.
Photograph of Sega Dreamcast System.
Photograph of Nintendo 64 System.
Whitepaper: 3D Graphics Demystified, Nov. 11, 1999, www.nvidia.com.
Whitepaper: "Z Buffering, Interpolation and More W-Buffering", Doug Rogers, Jan. 31, 2000, www.nvidia.com.
Whitepaper: Using GL_NV_vertex_array and GL_NV_fence, posted Aug. 1, 2000, www.nvidia.com.
Whitepaper: Anisotropic Texture Filtering in OpenGL, posted Jul. 17, 2000, www.nvidia.com.
Whitepaper: Mapping Texels to Pixels in D3D, posted Apr. 5, 2000, www.nvidia.com.
Whitepaper: Guard Band Clipping, posted Jan. 31, 2000, www.nvidia.com.
Whitepaper: Cube Environment Mapping, posted Jan. 14, 2000, www.nvidia.com.
Whitepaper: Color Key in D3D, posted Jan. 11, 2000, www.nvidia.com.
Whitepaper: Vertex Blending Under DX7 for the GeForce 256, Jan. 5, 2000, www.nvidia.com.
Whitepaper: Optimizing Direct3D for the GeForce 256, Jan. 3, 2000, www.nvidia.com.
Whitepaper: Dot Product Texture Blending, Dec. 3, 1999, www.nvidia.com.
Whitepaper: Technical Brief: AGP 4X with Fast Writes, Nov. 10, 1999, www.nvidia.com.
Technical Brief: Transform and Lighting, Nov. 10, 1999, www.nvidia.com.
Technical Brief: What's New With Microsoft DirectX7, posted Nov. 10, 1999, www.nvidia.com.
Mitchell et al., "Multitexturing in Direct X6", Game Developer, Sep. 1998, www.gdmag.com.
VisionTek, "GeForce2 GS Graphics Processing Unit", © 2000 www.visiontek.com.
Jim Bushnell et al. "Advanced Multitexture Effects With Direct3D and OpenGL", Pyramid Peak Design & ATI Research, Inc., GameDevelopers Conference, © 1999.
Sony PlayStation II Instruction Manual, Sony Computer Entertainment Inc., © 2000.
Stand and Be Judged, Next Generation, May 2000.
PlayStation II: Hardware Heaven or Hell?, Next Generation, Jan. 2000.
Chris Charla, "Play Station II: The Latest News", Next Generation, Sep. 1999.
"First PlayStation II Gameplay Screens Revealed!", Next Generation, Sep. 1999.
Game Enthusiast Online Highlights, Mar. 18, 1999.
Game Enthusiast Online Highlights, Mar. 19, 1999.
Game Enthusiast Online Highlights, Mar. 17, 1999.
Game Enthusiast Online Highlights, Oct. 20, 1999.
Joel Easley, "Playstation II Revealed", Game Week, Sep. 29, 1999.
Inside Sony's Next Generation Playstation, © 1999.
Press Releases, Mar. 18, 1999.
Chris Johnston, "PlayStation Part Deux", Press Start, © 1999.
Nikkel Shimbun, "Sony Making SME, Chemical and SPT into Wholly-Owned Subsidiaries", Mar. 9, 1999.
AM News: Japanese Developers Not All Sold on PS2, Next Generation, Mar. 16, 1999.
Sony To Turn PlayStation Maker Into Wholly Owned Unit-Nikkel, Dow Jones News Service, Mar. 8, 1999.
Yumiko Ono, Sony Antes Up Its Chips In Bet On New Game System, Dow Jones News Service, Mar. 4, 1999.
MacWeek.Com Gets Inside Story on Connectix VGS for Windows; Controversial Emulator of Sony PlayStation Games Currently Available for Macs Only, Business Wire, Mar. 12, 1999.

"DexDrive Bridges Gap", The Tampa Tribune, Mar. 12, 1999.
A Microprocessor With a 128b CPU, 10 Floating-Point MAC's, 4 Floating-Point Dividers, and an MPEG2 Decoder, 1999 IEEE International Solid-State Circuits Conference, Feb. 16, 1999.
Dreamcast Instruction Manual, Sega Enterprises, Ltd., © 1998.
"Sega To Launch Video Camera for Dreamcast", Reuters Business News, Feb. 16, 2000.
David Pescovitz, "Dream On", Wired, Aug. 1999.
Randy Nelson, "Dreamcast 101: Everything You Ever Wanted To Know About Sega's Powerful New Console", Official Sega Dreamcast Magazine, Jun. 1999.
2D/3D Graphics Card User Manual, Guillemot © 1999.
Nintendo 64 Instruction Booklet, Nintendo of America, 1998.
Steven Levy, "Here Comes PlayStation II", Newsweek, Mar. 6, 2000.
David Sheff, "Sony Smackage: Test Driving The PlayStation II", Wired, Nov. 1999.
Introducing The Next Generation PlayStation, Sony Computer Entertainment Inc., © 1999.
Leadtek GTS, Aug. 3, 2000, www.hexus.net.
Voodoo 5 5500 Review, Jul. 26, 2000, www.hexus.net.
ATI Radeon 64 Meg DDR OEM, Aug. 19, 2000, www.hexus.net.
Microsoft Xbox—The Future of Gaming, Microsoft Xbox Performance Sheet, www.xbox.com.
Robert L. Cook, "Shade Trees", Computer Graphics, vol. 18, No. 3, Jul. 1984.
Wang et al., "Second-Depth Shadow Mapping", Department of Computer Science, Univ. N.C., Chapel Hill, N.C. pp. 1-7.
Peercy et al., "Efficient Bump Mapping Hardware", Computer Graphics Proceedings, Annual Conference Series, 1997.
Gustavo Oliveira, "Refractive Texture Mappig, Part One", www.gamasutra.com, Nov. 10, 2000.
John Schlag, Fast Embossing Effects on Raster Image Data, Graphics Gems IV, Edited by Paul S. Heckbert, Computer Science Department, Carnegie Mellon University, Academic Press, Inc., 1994,pp. 433-437.
James F. Blinn, "Simulationof Wrinkled Surfaces," Caltech/JPL, pp. 286-292, SIGGRAPH 78 (1978).
Tomas Möller and Eric Haines "Real-Time Rendering", AK Peters, Ltd., © 1999, pp. 127-142.
Technical Presentation: Vertex Buffers, posted Jun. 12, 2000, www.nvidia.com.
Technical Presentation: Hardware Transform and Lighting, www.nvidia.com, posted Jun. 12, 2000.
Technical Presentation: Hardware Bump-mapping Choices and Concepts, Jun. 7, 2000, www.nvidia.com.
Technical Presentation: How to Bump Map a Skinned Polygonal Model, Jun. 7, 2000, www.nvidia.com.
Technical Presentation: Computations for Hardware Lighting and Shading, Mar. 17, 2000, www.nvidia.com.
Technical Presentation: Practical Bump-mapping for Today's GPUs, Mar. 17, 2000 www.nvidia.com.
Technical Presentation: Shadows, Transparency, & Fog, Mar. 17, 2000 www.nvidia.com.
Technical Presentation: GeForce 256 Register Combiners, Mar. 17, 2000, www.nvidia.com.
Technical Presentation: TexGen & The Texture Matrix, Mar. 15, 2000 www.nvidia.com.
Technical Presentation: Toon Shading, Mar. 15, 2000, www.nvidia.com.
Technical Presentation: D3D 7 Vertex Lighting, Mar. 15, 2000, www.nvidia.com.
Technical Presentation: Per-Pixel Lighting (by S. Dietrich) Mar. 14, 2000 www.nvidia.com.
Technical Presentation: GeForce 256 and RIVA TNT Combiners, Dec. 8, 1999, www.nvidia.com.
Technical Presentation: Vertex Cache Optimization, Nov. 12, 1999, www.nvidia.com.
Technical Presentation: Vertex Blending, Nov. 12, 1999, www.nvidia.com.
Technical Presentation: Hardware Transform and Lighting, Nov. 12, 1999, www.nvidia.com.
Technical Presentation: GeForce 256 Overview, Nov. 12, 1999, www.nvidia.com.
Technical Presentation: DirectX 7 and Texture Management, Nov. 12, 1999 www.nvidia.com.
Technical Presentation: Dot Product Lighting, Nov. 12, 1999, www.nvidia.com.
Technical Presentation: Texture Coordinate Generation, Nov. 3, 1999, www.nvidia.com.
Technical Presentation: Phong Shading and Lightmaps, Nov. 3, 1999, www.nvidia.com.
Technical Presentation: The ARB_multitexture Extension, Nov. 3, 1999 www.nvidia.com.
Technical Presentation: Multitexture Combiners, Nov. 3, 1999, www.nvidia.com.
Technical Presentation: Emboss Bump Mapping, Nov. 3, 1999, www.nvidia.com.
Technical Presentation: Hardware Accelerated Anisotropic Lighting, Nov. 3, 1999, www.nvidia.com.
Techincal Presentation: Guard Band Clipping, Nov. 3, 1999, www.nvidia.com.
The RenderMan Interface, Stephan R. Keith, Version 3.1, Pixar Animation Studios, Sep. 1989.
The RenderMan Interface, Version 3.2, Pixar Animation Studios, Jul. 2000, www.pixar.com.
NVIDIA Product Overview, "GeForce2Ultra", NVIDIA Corporation, Aug. 21, 2000, www.nvidia.com.
Duke, "Dreamcast Technical Specs", Sega Dreamcast Review, Sega, Feb. 1999, www.game-revolution.com.
Marlin Rowley, "GeForce 1 & 2 GPU Speed Tests", May 11, 2000, www.g256.com.
"Dreamcast: The Full Story", Next Generation, Sep. 1998.
DirectX 7.0 Programmer's Reference, Microsoft Corporation, 1995-1999 (as part of the DirectX 7.0 SDK on the Companion CD included with "Inside Direct3D", Microsoft Programming Series, Peter J. Kovach, Microsoft Press, 1999).
"Inside Direct3D", Microsoft Programming Series, Peter J. Kovach, Microsoft Press, 1999.
"OpenGL Programming Guide, The Official Guide to Learning OpenGL, Release 1", Jackie Nieder, Tom David, Mason Woo, Addision-Wesley Publishing Co., 1993.
"Procedural Elements for Computer Graphics," Second Edition, David F. Rogers, McGraw Hill, 1998.
"Real-Time Rendering," Tomas Molleir, Eric Haines, AK Peters, 1999.
"Computer Graphics, Principles and Practice," Second Edition, The Systems Programming Series, Foley, van Dam, Fiener, Hughes, Addison Wesley, 1990.
"Principles of Three-Dimensional Computer Animation", Revised Edition, Michael O'Rourke, W.W. Norton & Company, 1998.

* cited by examiner

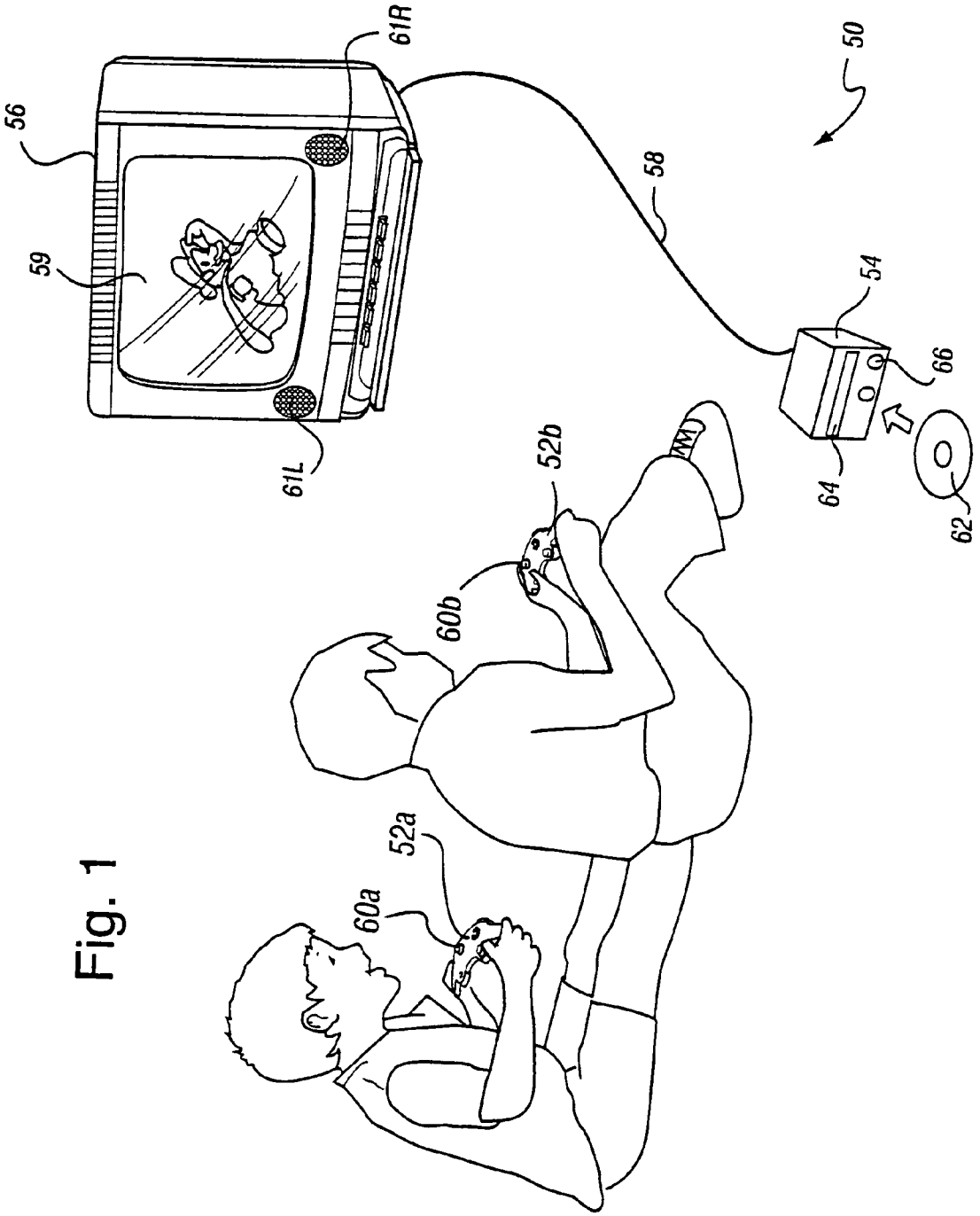

Fig. 1

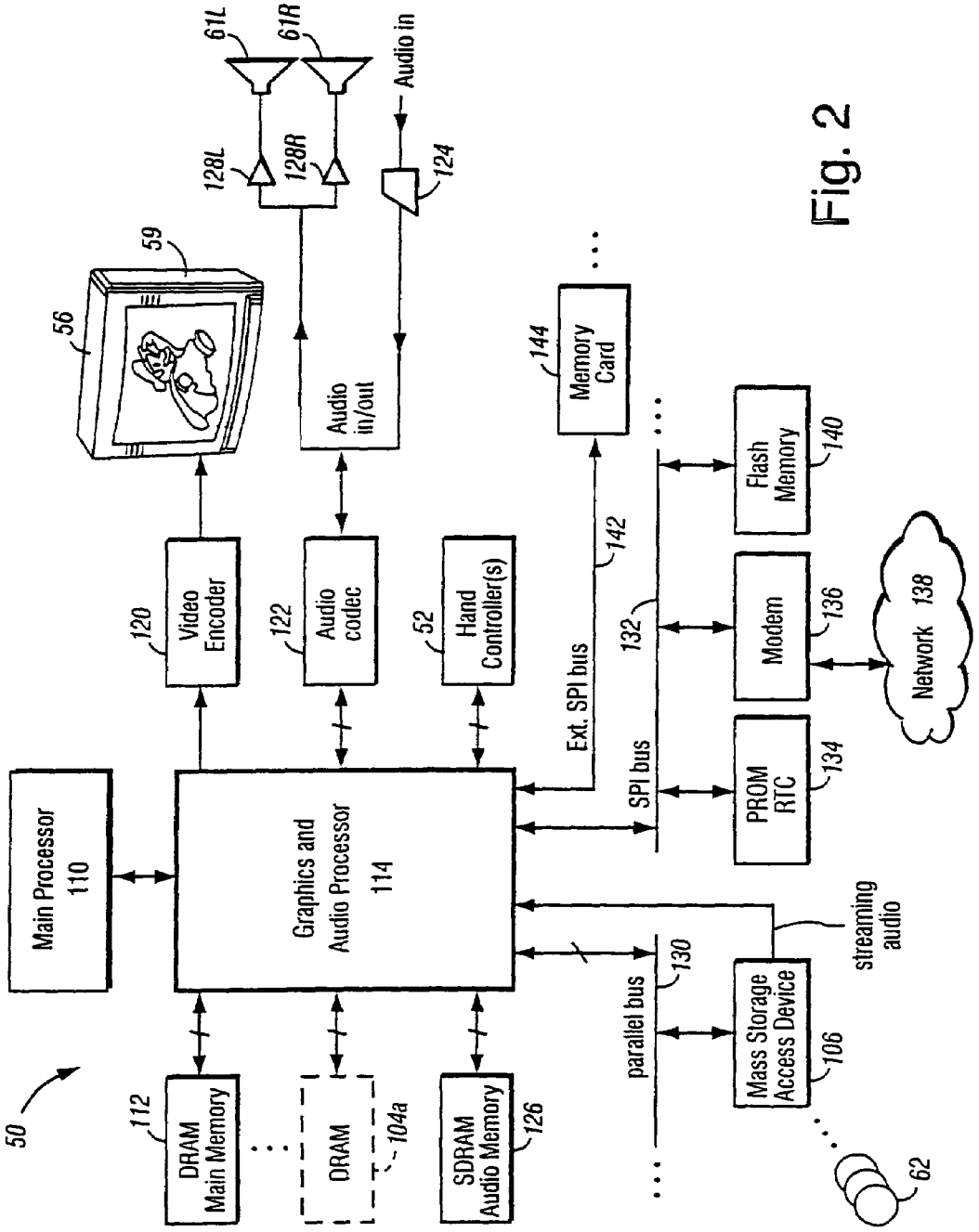
50
Main Processor 110
Graphics and Audio Processor 114
112
DRAM Main Memory
DRAM
104a
SDRAM Audio Memory
126
parallel bus
130
Mass Storage Access Device
106
62
streaming audio
SPI bus
132
Ext. SPI bus
142
PROM RTC
134
Modem
136
Network 138
Flash Memory
140
Memory Card
144
120
Video Encoder
122
Audio codec
52
Hand Controller(s)
56
59
Audio in/out
128L
128R
61L
61R
124
Audio in

Fig. 2

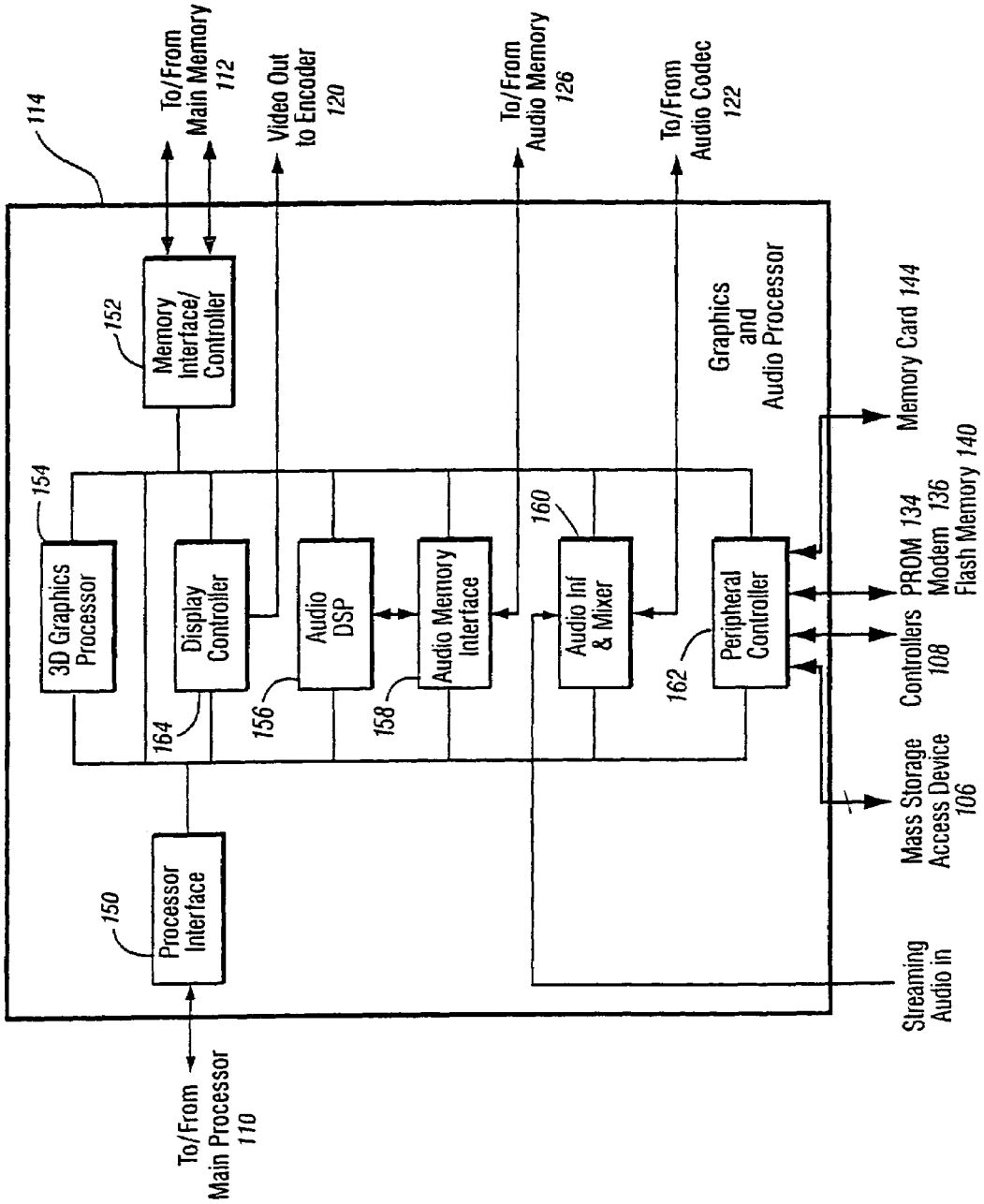
114
To/From Main Memory 112
Video Out to Encoder 120
To/From Audio Memory 126
To/From Audio Codec 122
152
Memory Interface/ Controller
154
3D Graphics Processor
Display Controller
164
Audio DSP
156
Audio Memory Interface
158
160
Audio Inf & Mixer
Peripheral Controller
162
Graphics and Audio Processor
Memory Card 144
PROM 134
Modem 136
Flash Memory 140
Controllers 108
Mass Storage Access Device 106
Streaming Audio in
150
Processor Interface
To/From Main Processor 110

Fig. 3

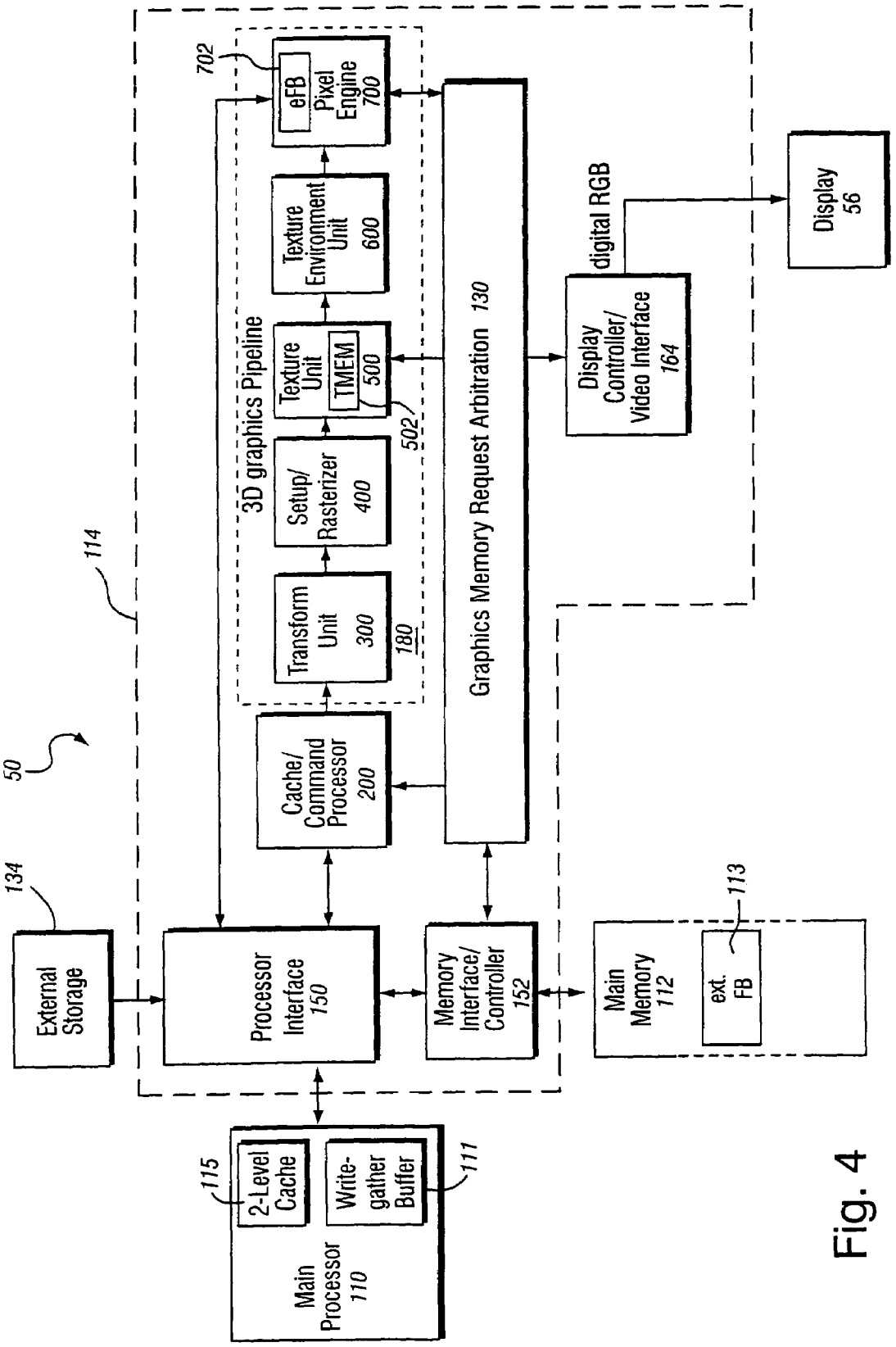
50
114
134
External Storage
Processor Interface 150
Cache/ Command Processor 200
3D graphics Pipeline
180
Transform Unit 300
Setup/ Rasterizer 400
Texture Unit
TMEM
500
502
Texture Environment Unit 600
702
eFB
Pixel Engine 700
Graphics Memory Request Arbitration 130
Memory Interface/ Controller 152
Main Memory 112
ext. FB
113
digital RGB
Display Controller/ Video Interface 164
Display 56
Main Processor 110
115
2-Level Cache
Write-gather Buffer
111

Fig. 4

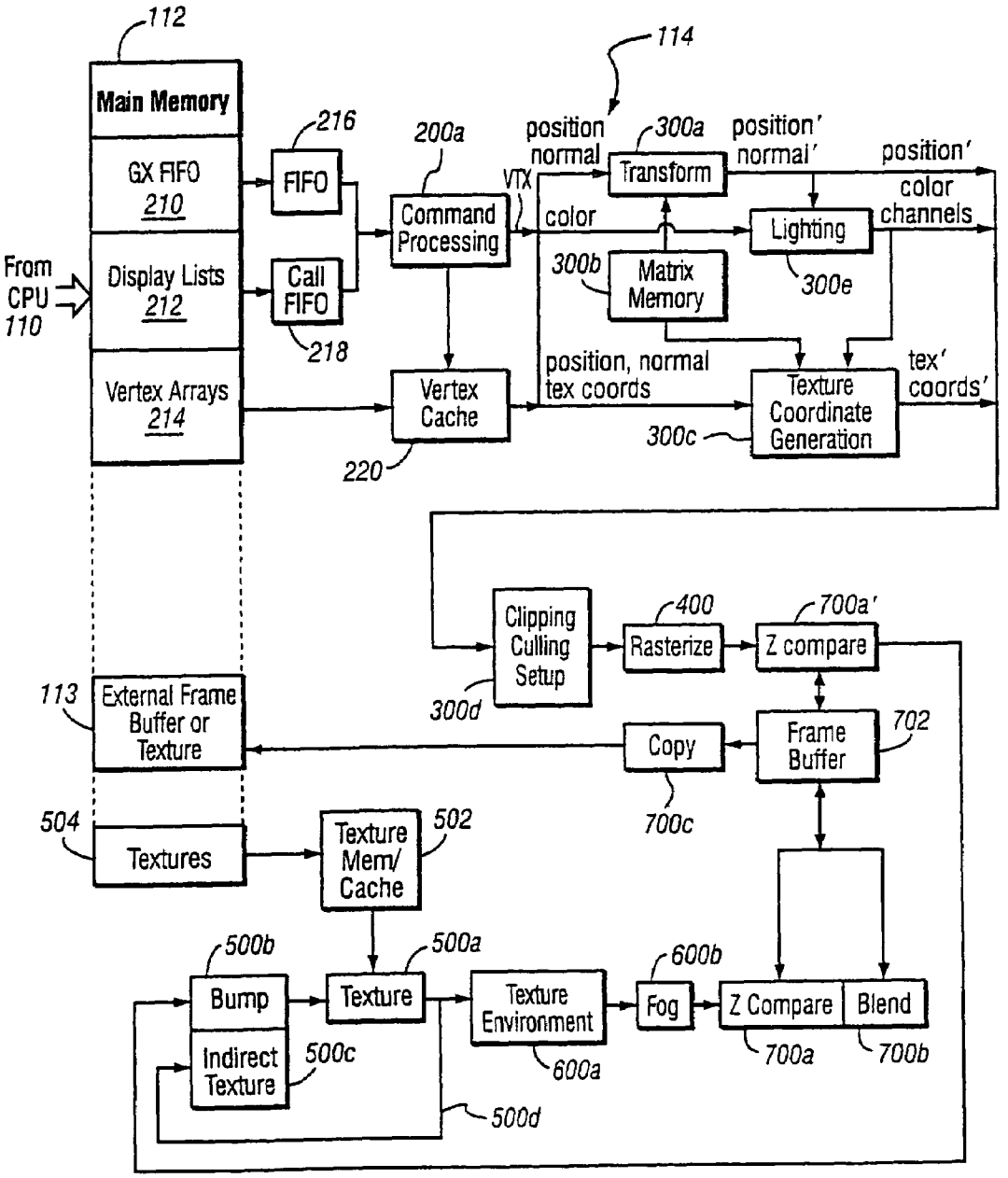

Fig. 5 EXAMPLE GRAPHICS PROCESSOR FLOW

Fig. 6
(Embedded Frame Buffer (EFB))

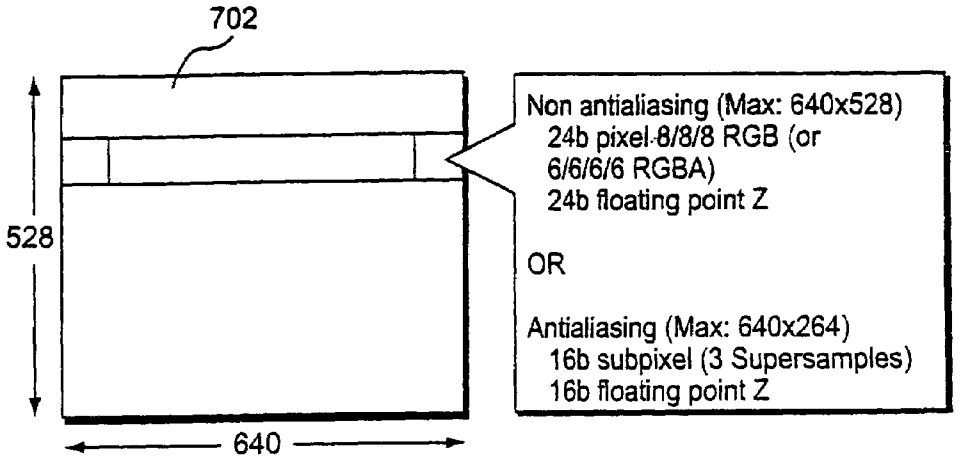

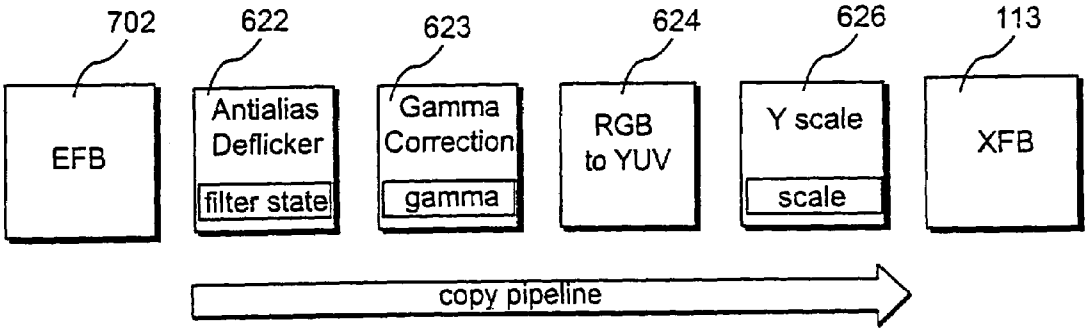

Fig. 9

Fig. 7
(Embedded Frame Buffer Organization)

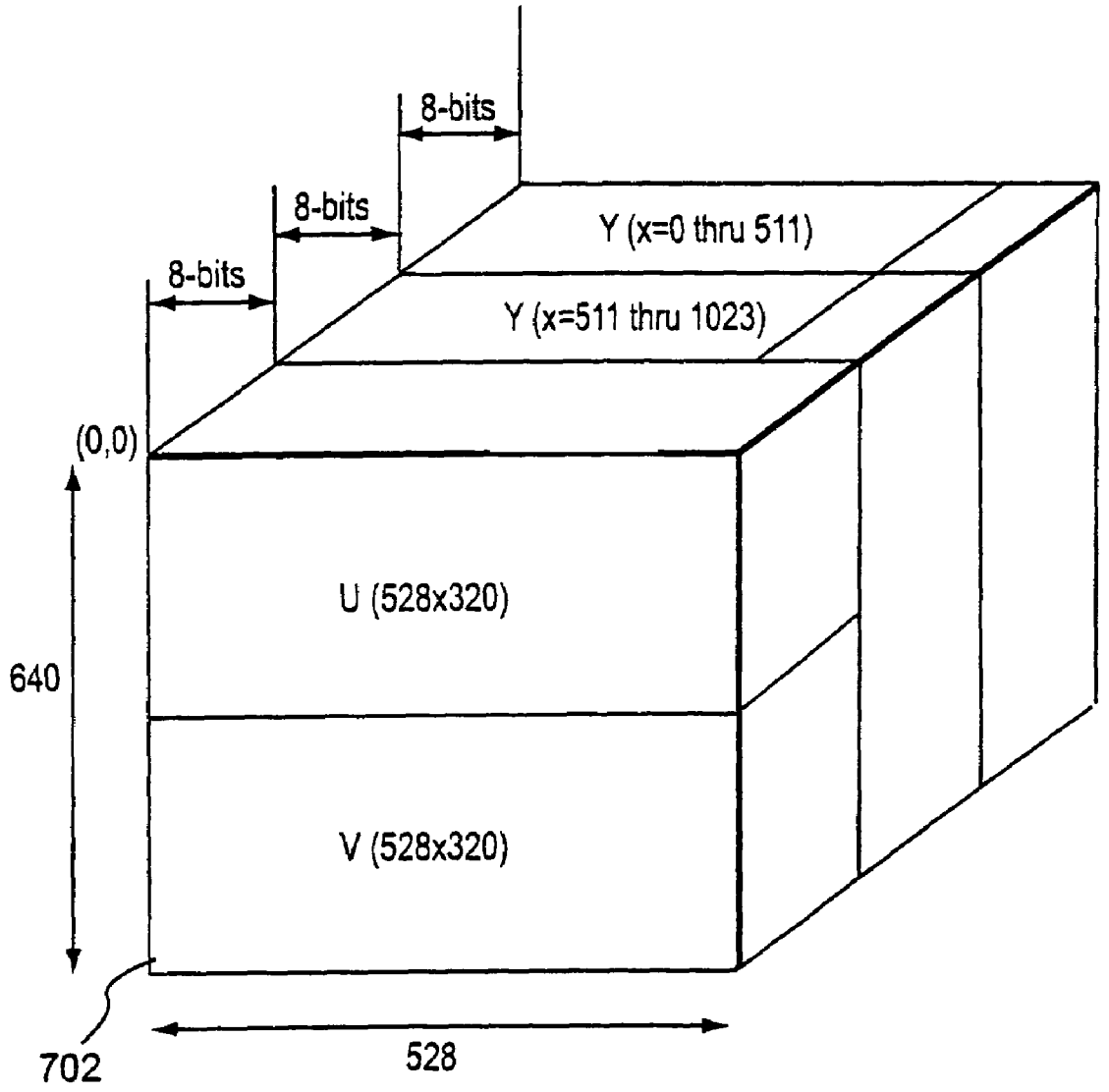

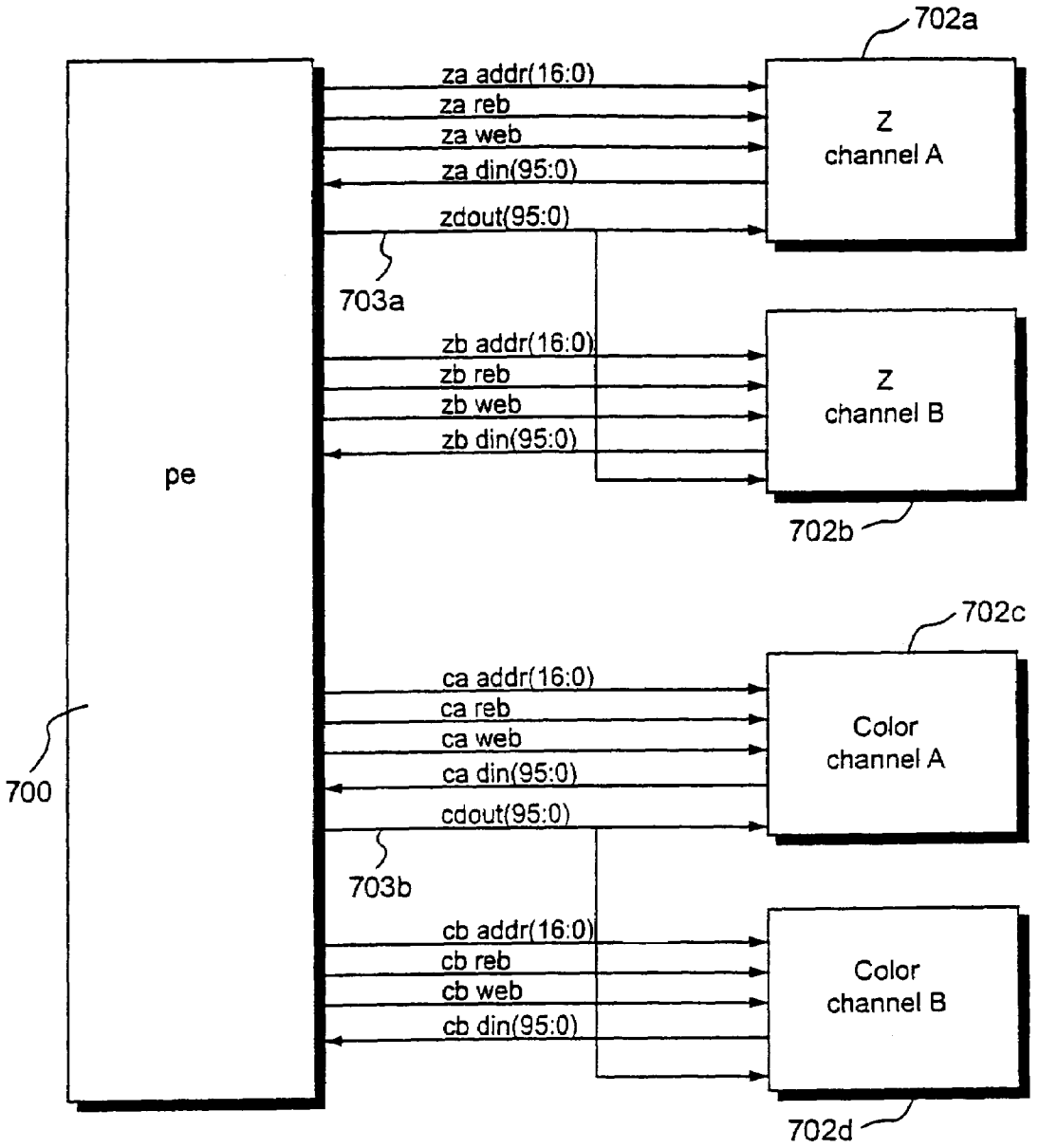

Fig. 8
(Pixel Engine/Frame Buffer Interface)

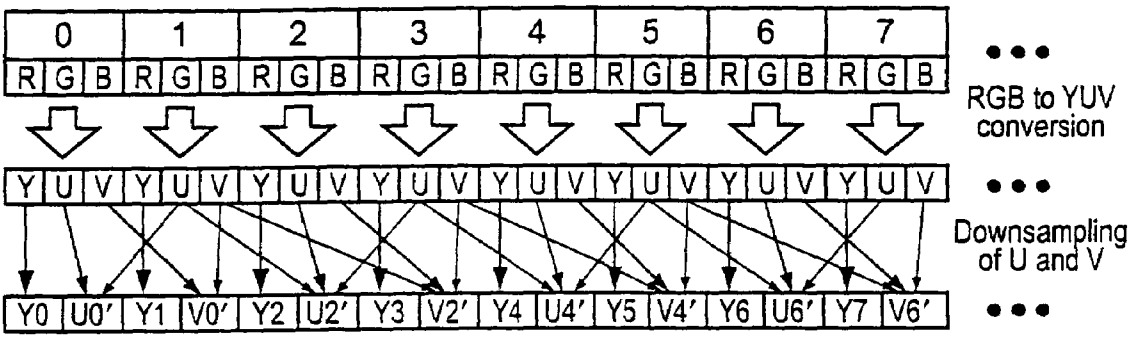

$$U(i) = 1/4 * U(i-1) + 1/2 * U(i) + 1/4 * U(i+1)$$

$$V(i) = 1/4 * V(i-1) + 1/2 * V(i) + 1/4 * V(i+1)$$

Fig. 10A
(RGB to YUV Conversion)

Fig. 10B
(Vertial Scaling)

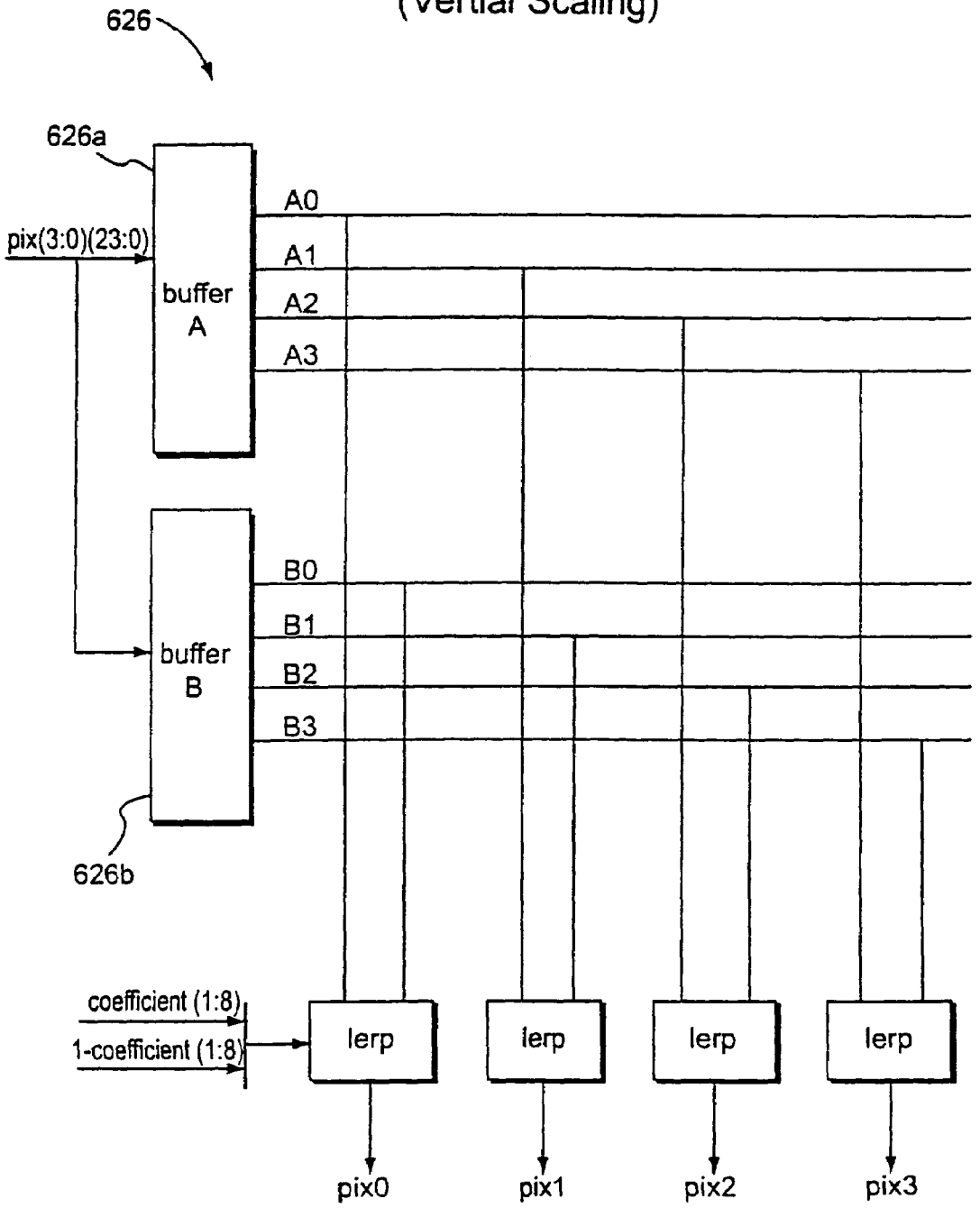

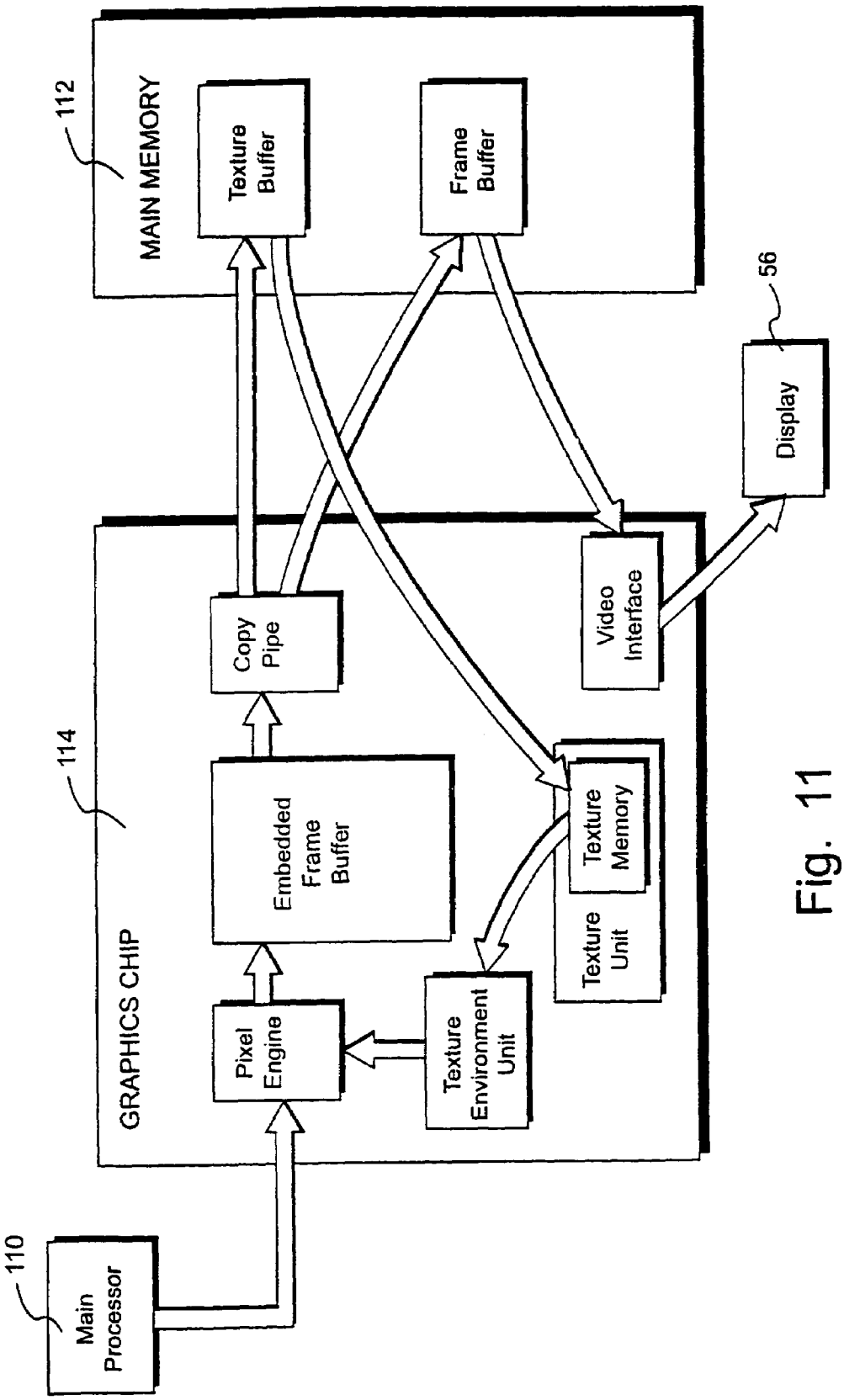
112
MAIN MEMORY
Texture Buffer
Frame Buffer
56
Display
114
GRAPHICS CHIP
Copy Pipe
Video Interface
Embedded Frame Buffer
Texture Memory
Texture Unit
Pixel Engine
Texture Environment Unit
110
Main Processor

Fig. 11

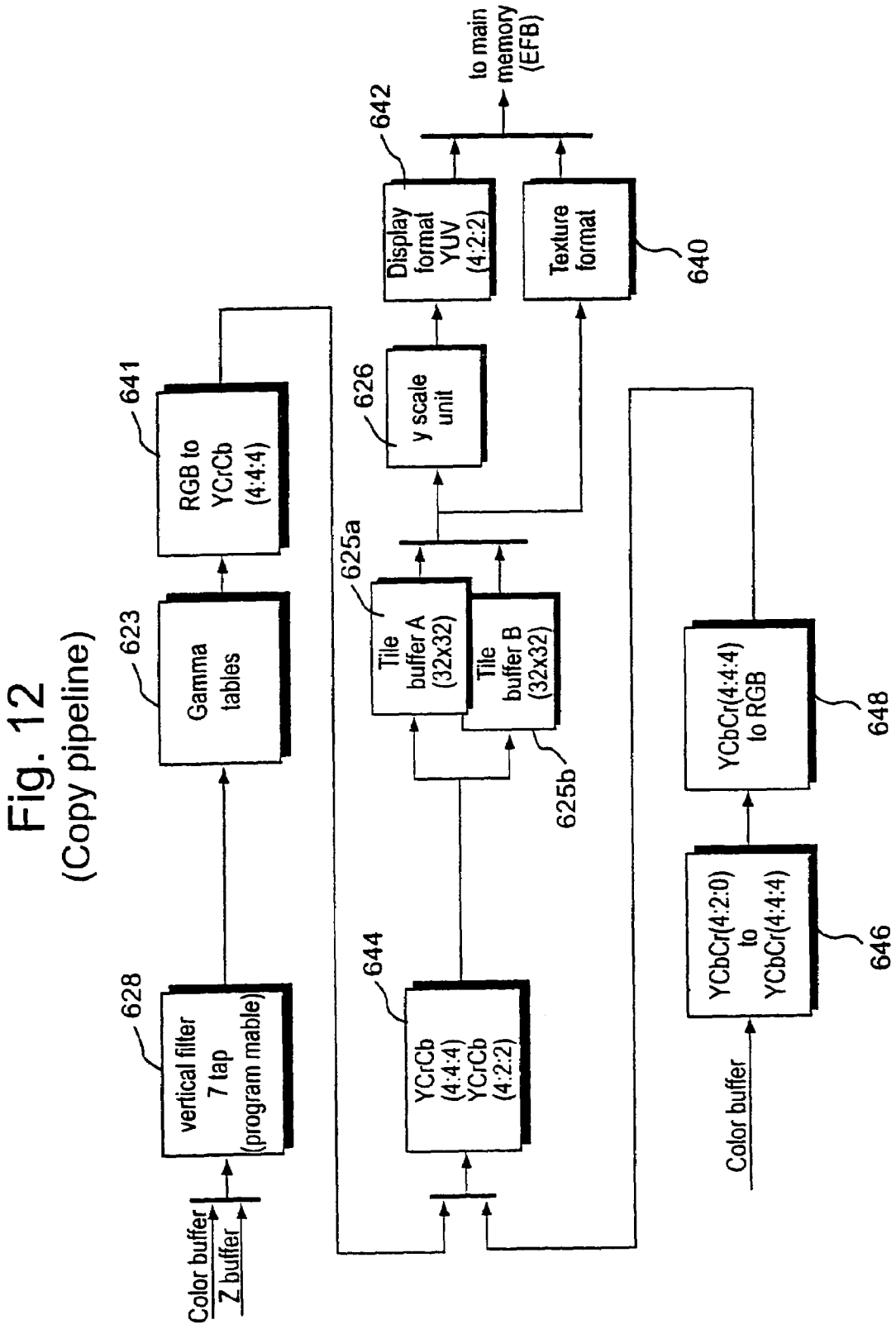

Fig. 12
(Copy pipeline)

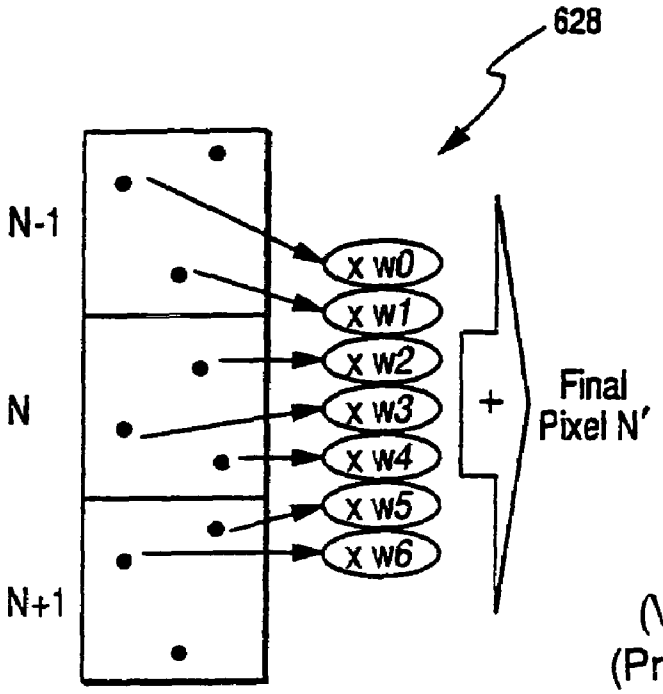

Fig. 12A
(Vertical Filter Blending)
(Programmable 7-tap filter)

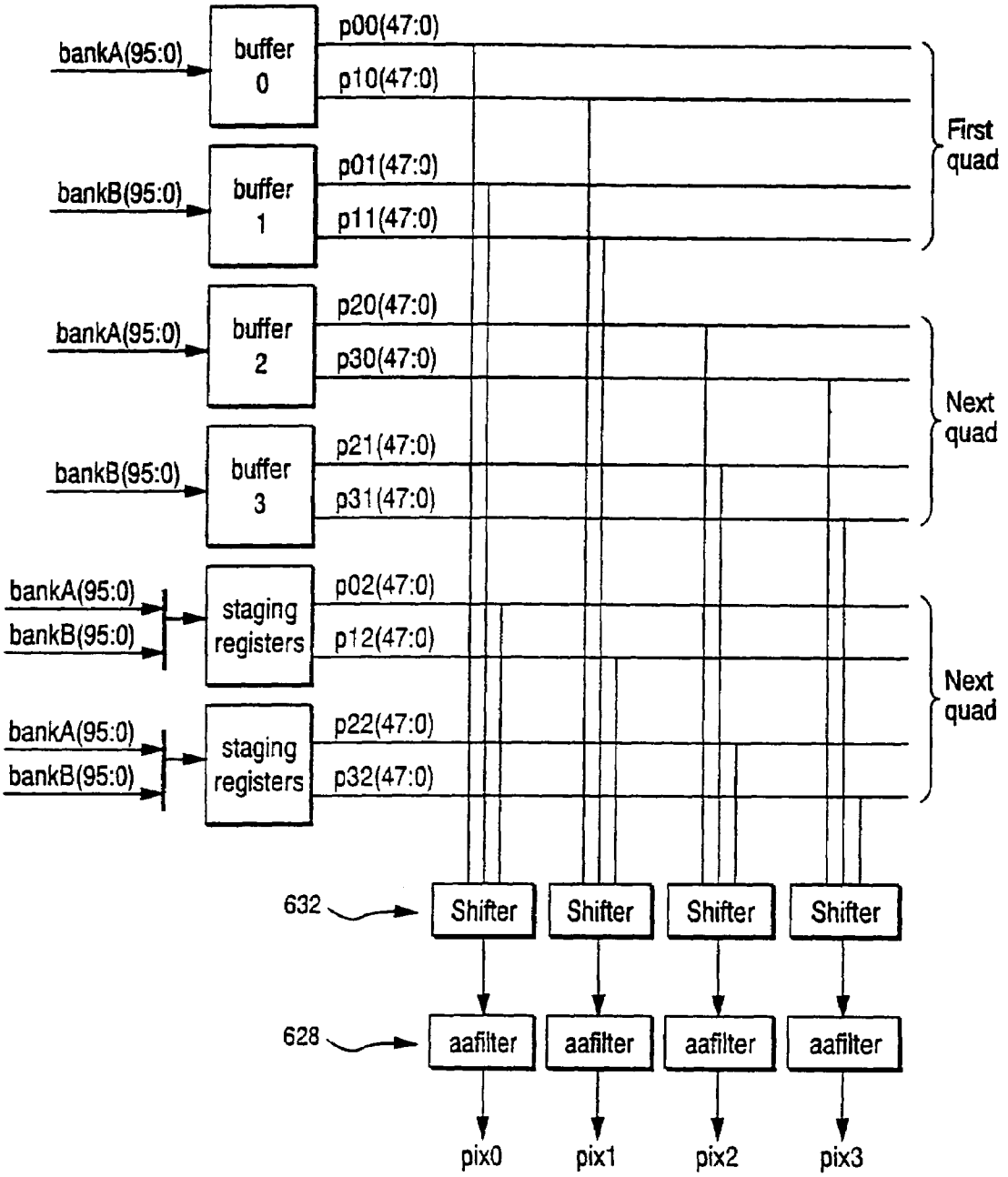

Fig. 12B
(AA buffering)

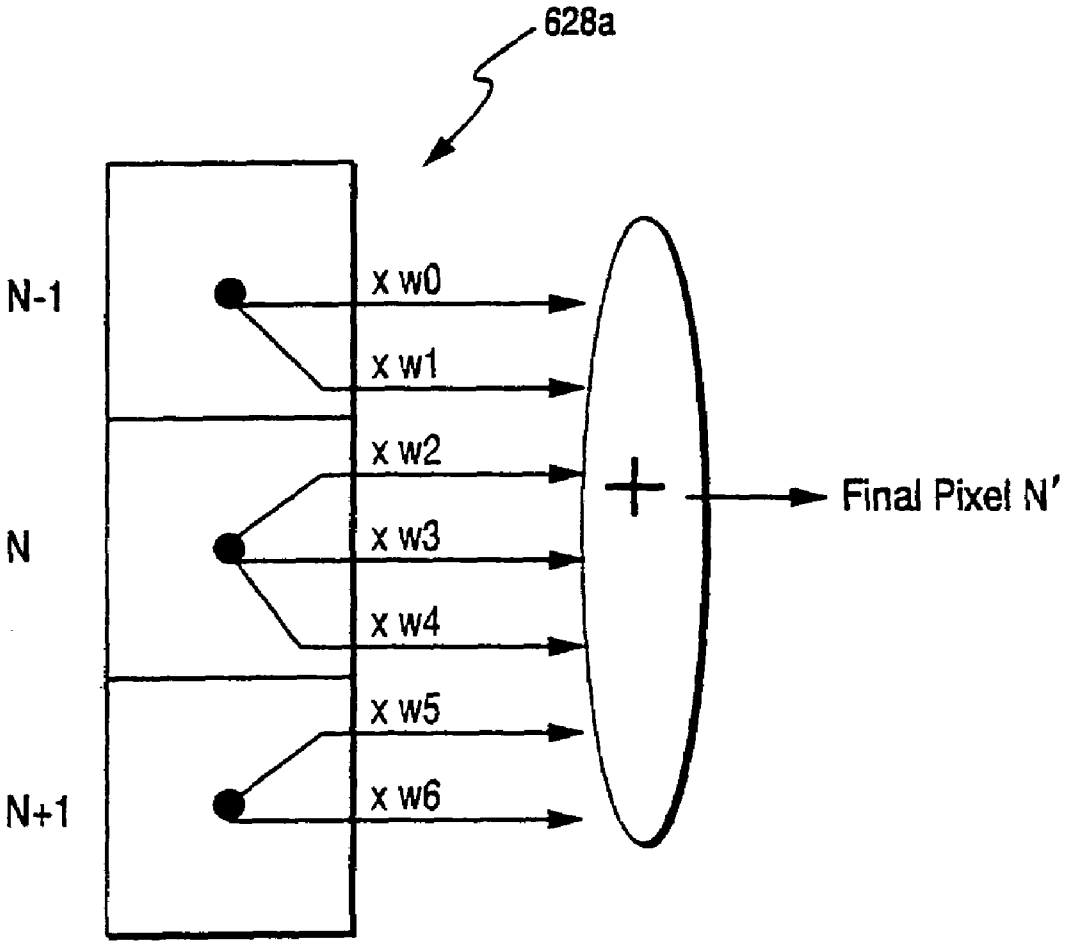

Fig. 12C

Example de-flickering filter

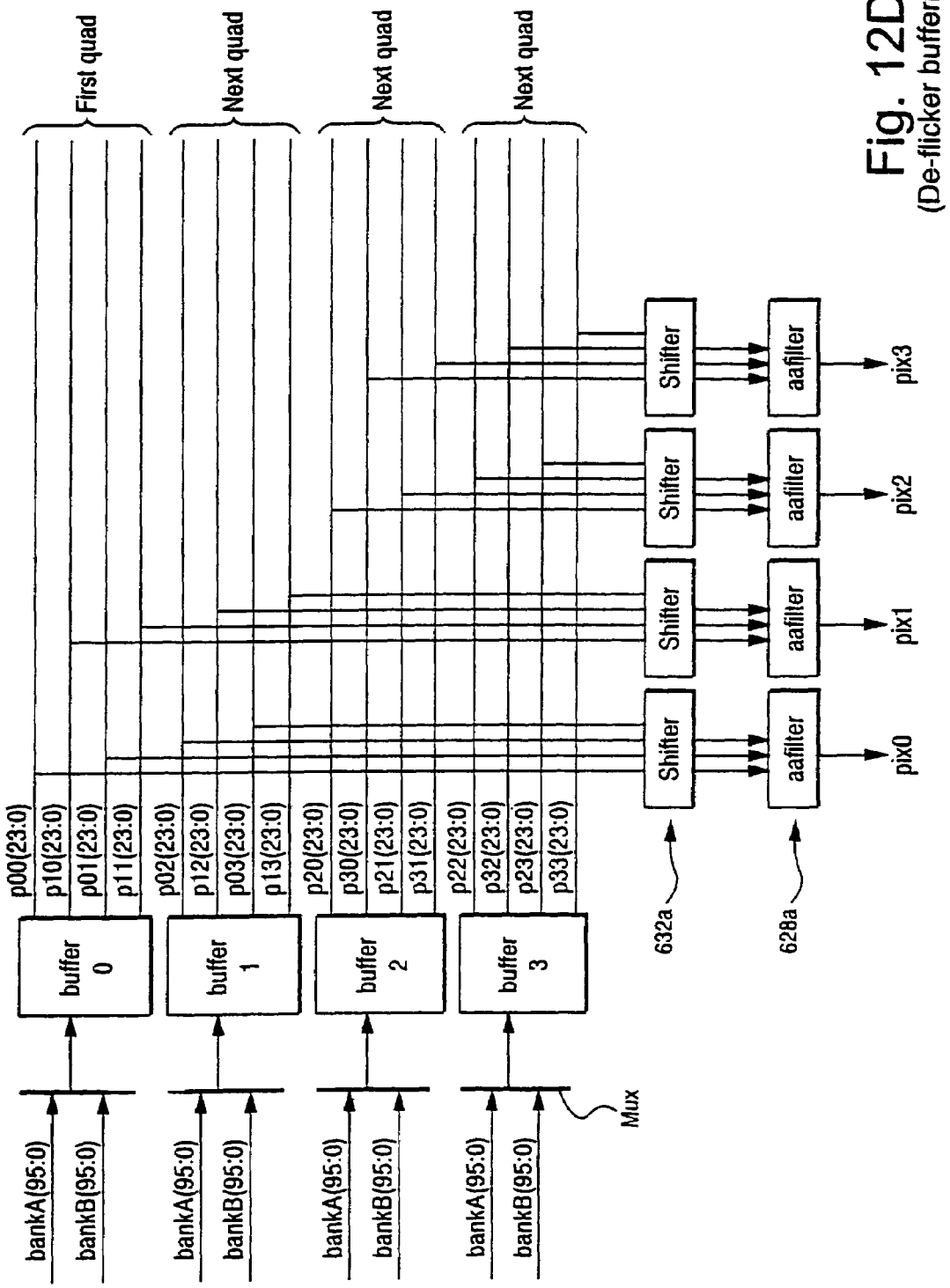

Fig. 12D
(De-flicker buffering)

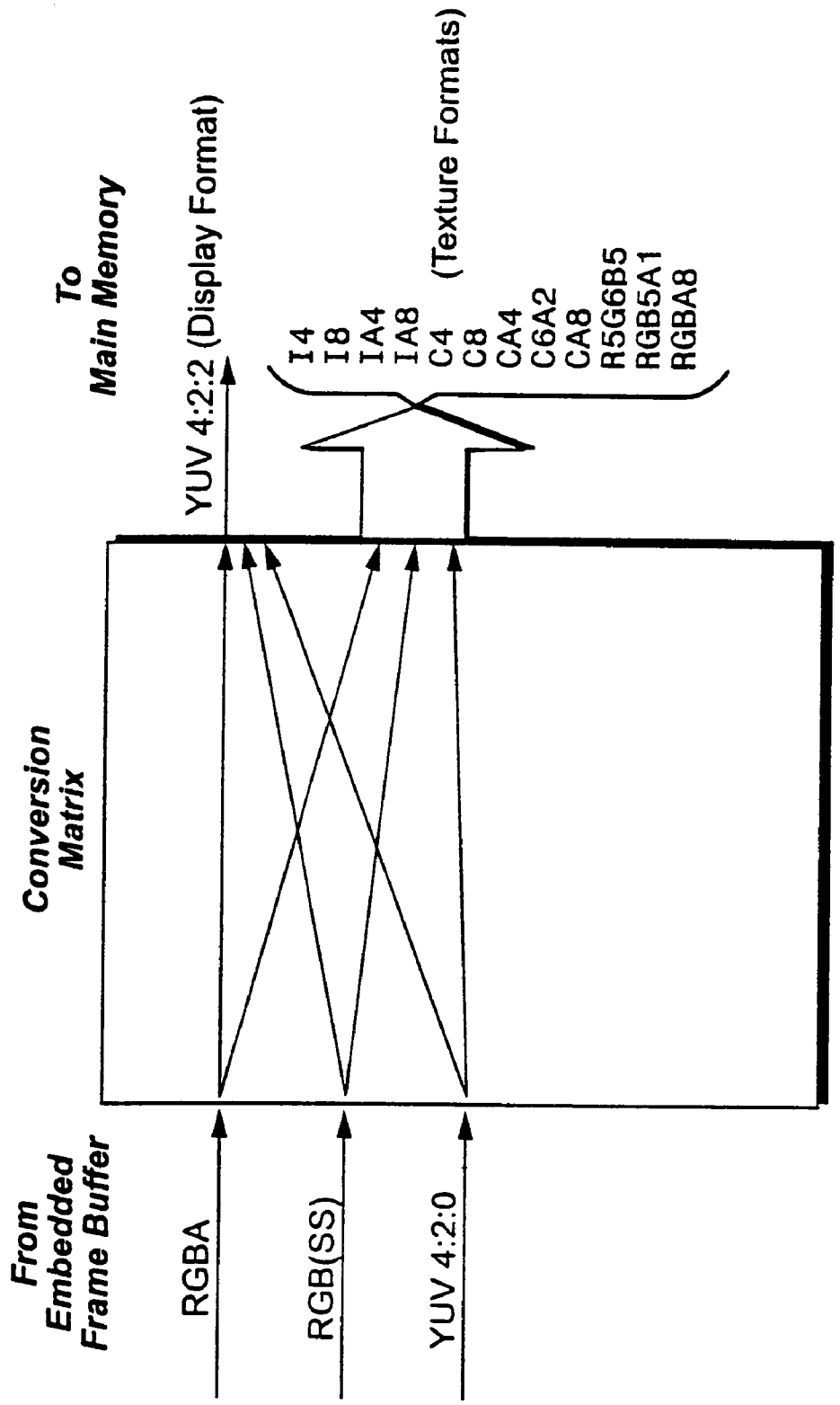
From Embedded Frame Buffer
RGBA
RGB(SS)
YUV 4:2:0
Conversion Matrix
To Main Memory
YUV 4:2:2 (Display Format)
I4
I8
IA4
IA8
C4
C8
CA4
C6A2
CA8
R5G6B5
RGB5A1
RGBA8
(Texture Formats)

Fig. 12E

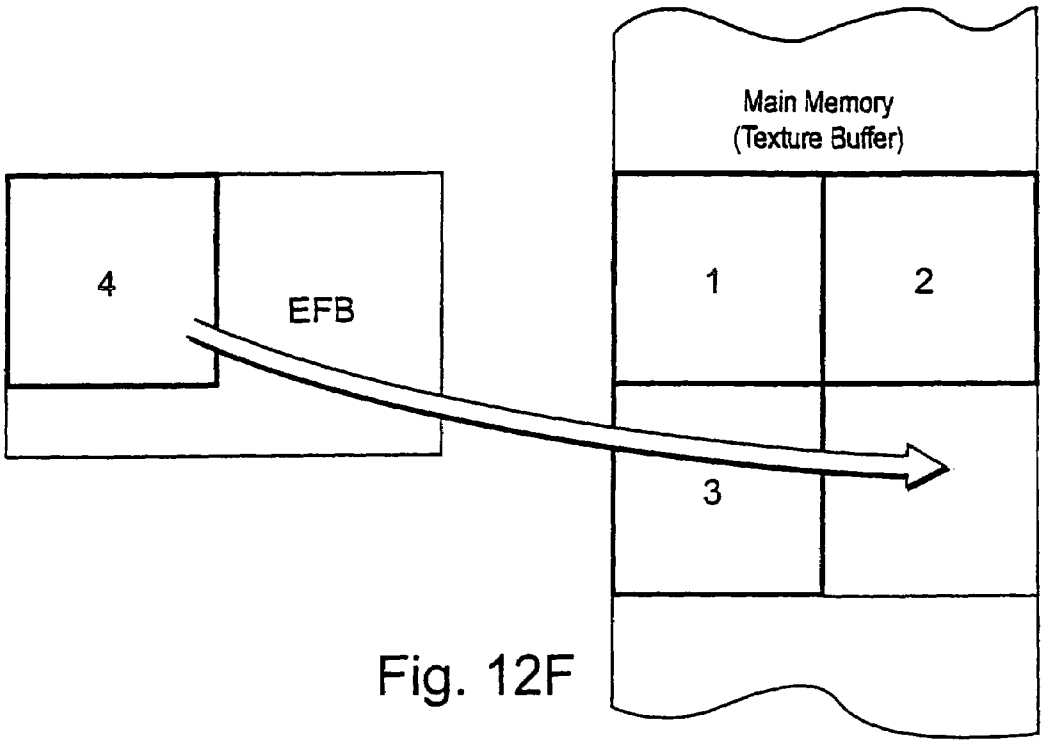

Fig. 12F

Fig. 13
(YCbCr 4:4:4 to 4:2:2 down sampling)

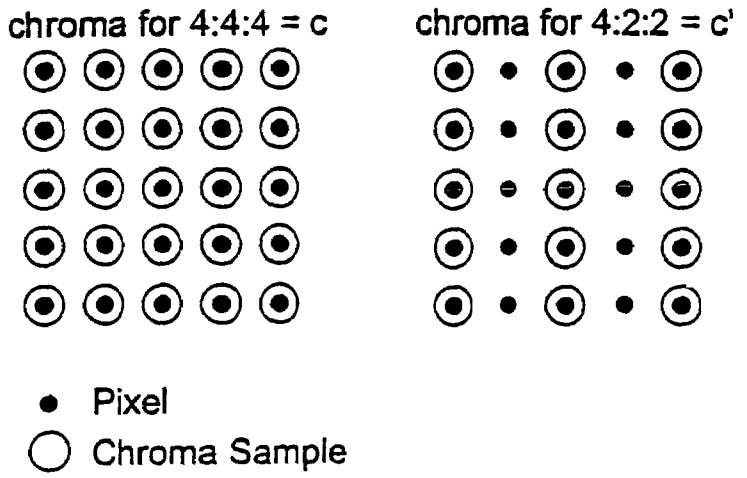

Fig. 14A
(YCbCr 4:2:0 to YCbCr 4:2:2 up-sampling)

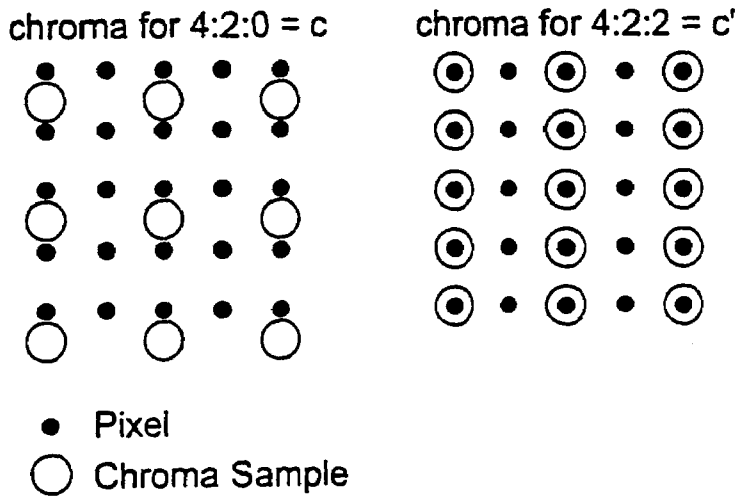

Fig. 14B
(YCbCr 4:2:2 to YCbCr 4:4:4 up-sampling)

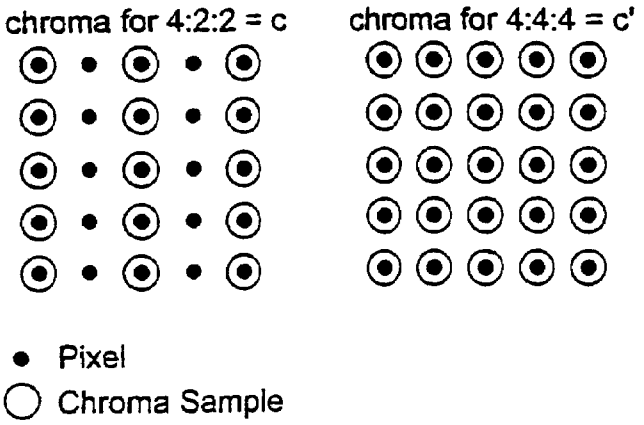

Fig. 15
(Control Register)

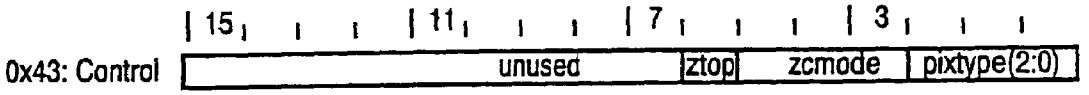

Fig. 16
(Texture Copy Command)

0x52:copy_cmd (texture) pixtypes allowed: rgb8, rgba6, rgb_aa,z,yuv8,yuv420:

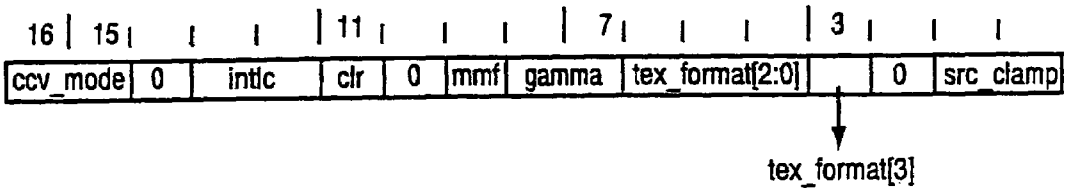

0x52:copy_cmd (display) pixtypes allowed:
rgb8, rgba6, rgb_aa,yuv420:

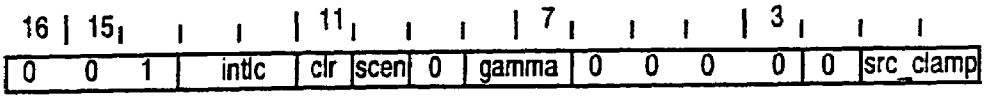

Fig. 17
(Display Copy Command)

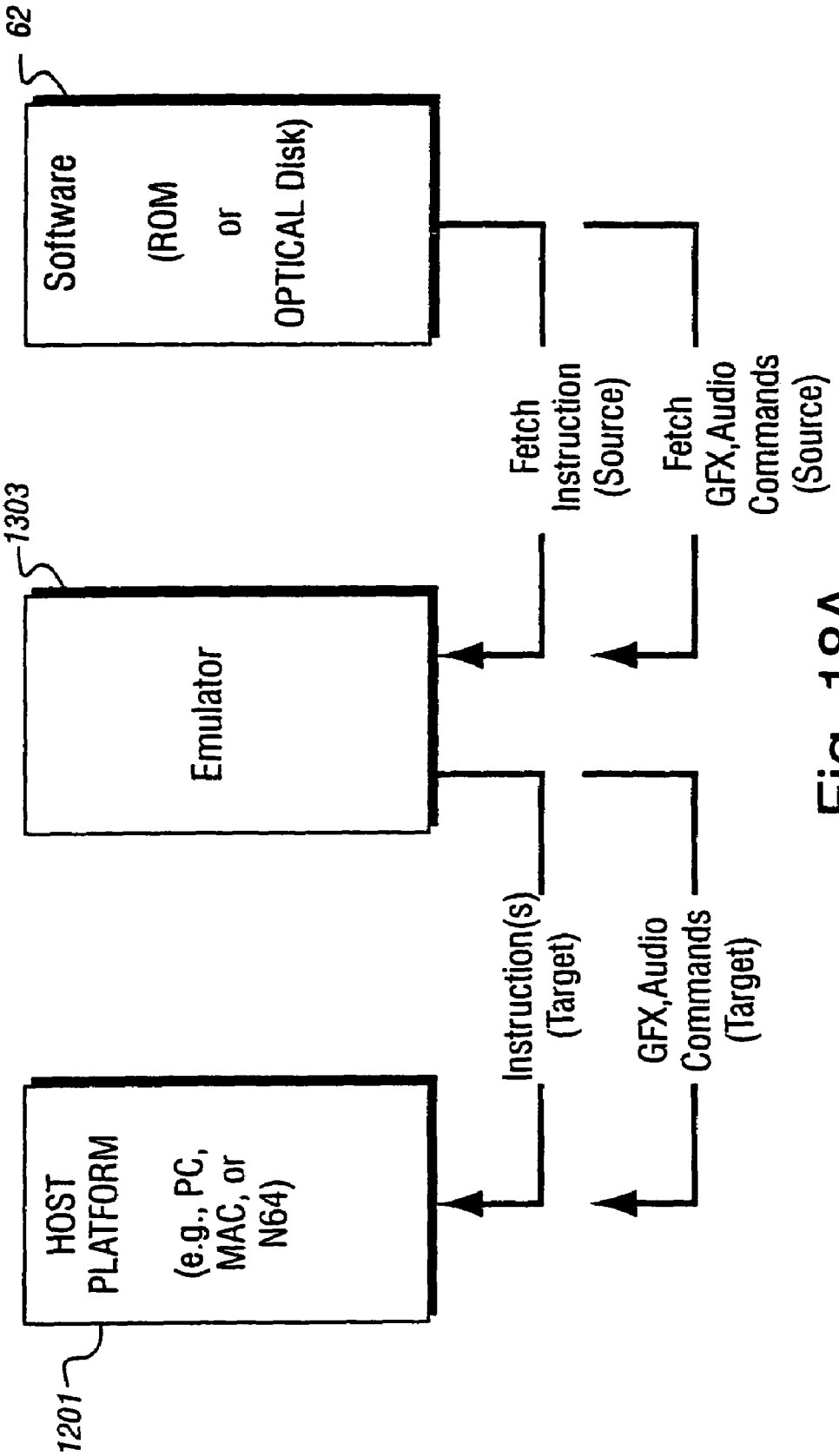
62
Software
(ROM
or
OPTICAL Disk)
1303
Emulator
1201
HOST
PLATFORM
(e.g., PC,
MAC, or
N64)
Fetch
Instruction
(Source)
Fetch
GFX,Audio
Commands
(Source)
Instruction(s)
(Target)
GFX,Audio
Commands
(Target)

Fig. 18A

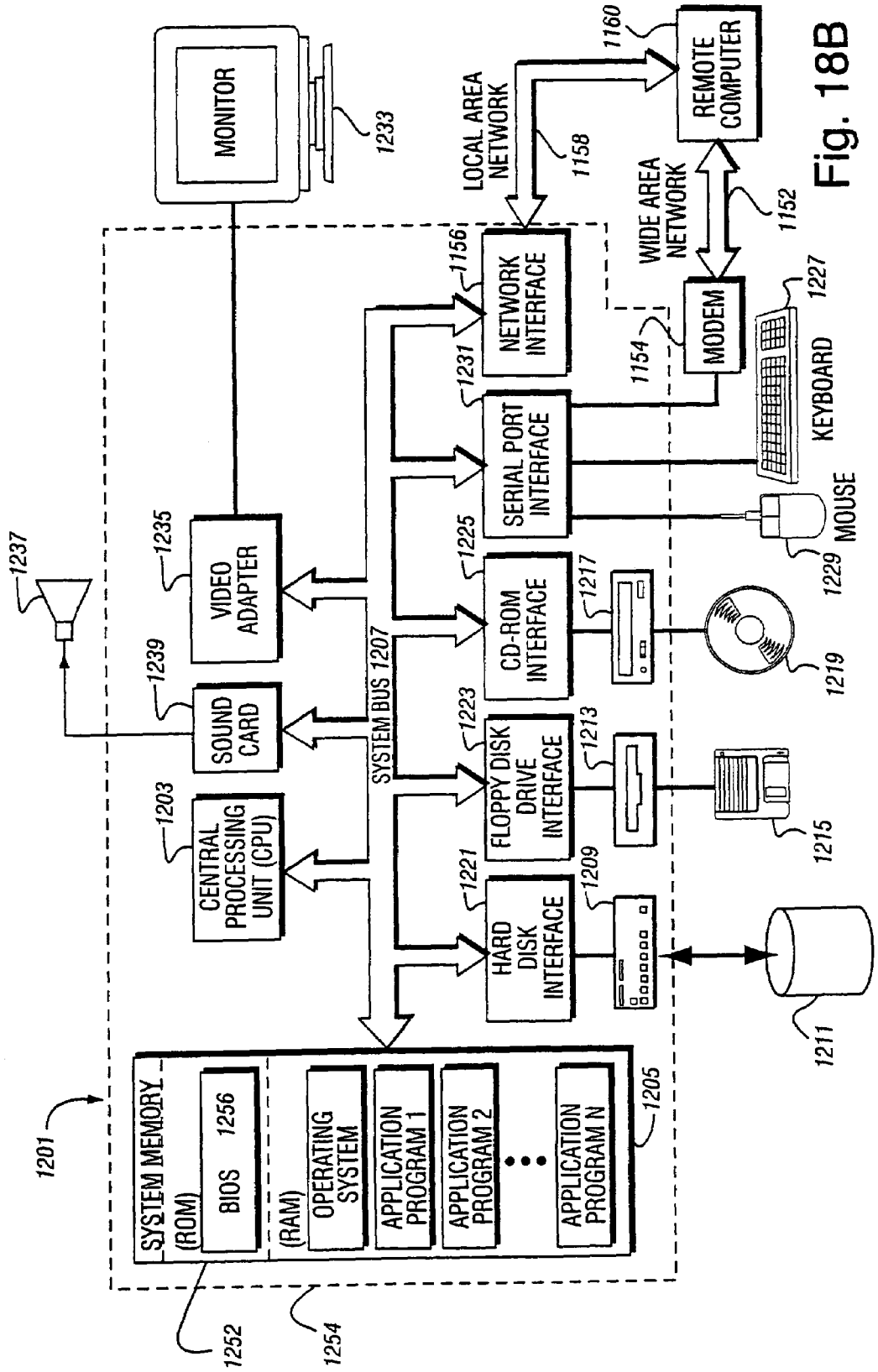
MONITOR
1233
LOCAL AREA NETWORK
1158
1160
REMOTE COMPUTER
WIDE AREA NETWORK
1152
1156
NETWORK INTERFACE
1231
SERIAL PORT INTERFACE
1154
MODEM
1227
KEYBOARD
MOUSE
1229
1237
1235
VIDEO ADAPTER
1239
SOUND CARD
1203
CENTRAL PROCESSING UNIT (CPU)
SYSTEM BUS 1207
1225
CD-ROM INTERFACE
1217
1219
1223
FLOPPY DISK DRIVE INTERFACE
1213
1215
1221
HARD DISK INTERFACE
1209
1211
1201
SYSTEM MEMORY
(ROM)
BIOS 1256
(RAM)
OPERATING SYSTEM
APPLICATION PROGRAM 1
APPLICATION PROGRAM 2
APPLICATION PROGRAM N
1205
1252
1254

Fig. 18B

GRAPHICS SYSTEM WITH COPY OUT CONVERSIONS BETWEEN EMBEDDED FRAME BUFFER AND MAIN MEMORY

CROSS-REFERENCE TO RELATED APPLICATIONS

This application is filed in accordance with 35 U.S.C. §119(e)(1) and claims the benefit of the provisional application Ser. No. 60/227,030 filed on Aug. 23, 2000, entitled "Graphics System With Copy Out Conversions Between Embedded Frame Buffer And Main Memory."

This application is related to the following co-pending applications identified below, which focus on various aspects of the graphics system described herein. Each of the following applications are hereby incorporated herein by reference.

- provisional Application No. 60/161,915, filed Oct. 28, 1999 and its corresponding utility application Ser. No. 09/465,754, filed Dec. 17, 1999, both entitled "Vertex Cache For 3D Computer Graphics",
- provisional Application No. 60/226,912, filed Aug. 23, 2000 and its corresponding utility application Ser. No. 09/726,215, filed Nov. 28, 2000, both entitled "Method and Apparatus for Buffering Graphics Data in a Graphics System",
- provisional Application No. 60/226,889, filed Aug. 23, 2000 and its corresponding utility application Ser. No. 09/722,419, filed Nov. 28, 2000, both entitled "Graphics Pipeline Token Synchronization",
- provisional Application No. 60/226,891, filed Aug. 23, 2000 and its corresponding utility application Ser. No. 09/722,382, filed Nov. 28, 2000, both entitled "Method And Apparatus For Direct and Indirect Texture Processing In A Graphics System",
- provisional Application No. 60/226,888, filed Aug. 23, 2000 and its corresponding utility application Ser. No. 09/722,367, filed Nov. 28, 2000, both entitled "Recirculating Shade Tree Blender For A Graphics System",
- provisional Application No. 60/226,892, filed Aug. 23, 2000 and its corresponding utility application Ser. No. 09/726,218, filed Nov. 28, 2000), both entitled "Method And Apparatus For Efficient Generation Of Texture Coordinate Displacements For Implementing Emboss-Style Bump Mapping In A Graphics Rendering System",
- provisional Application No. 60/226,893, filed Aug. 23, 2000 and its corresponding utility application Ser. No. 09/722,381 filed Nov. 28, 2000, both entitled "Method And Apparatus For Environment-Mapped Bump-Mapping In A Graphics System",
- provisional Application No. 60/227,007, filed Aug. 23, 2000 and its corresponding utility application Ser. No. 09/726,216, filed Nov. 28, 2000, both entitled "Achromatic Lighting in a Graphics System and Method",
- provisional Application No. 60/226,900, filed Aug. 23, 2000 and its corresponding utility application Ser. No. 09/726,226, filed Nov. 28, 2000, both entitled "Method And Apparatus For Anti-Aliasing In A Graphics System",
- provisional Application No. 60/226,910, filed Aug. 23, 2000 and its corresponding utility application Ser. No. 09/722,380, filed Nov. 28, 2000, both entitled "Graphics System With Embedded Frame Buffer Having Reconfigurable Pixel Formats",
- utility application Ser. No. 09/585,329, filed Jun. 2, 2000, entitled "Variable Bit Field Color Encoding",

- provisional Application No. 60/226,890, filed Aug. 23, 2000 and its corresponding utility application Ser. No. 09/726,227, filed Nov. 28, 2000, both entitled "Method And Apparatus For Dynamically Reconfiguring The Order Of Hidden Surface Processing Based On Rendering Mode",
- provisional Application No. 60/226,915, filed Aug. 23, 2000 and its corresponding utility application Ser. No. 09/726,212 filed Nov. 28, 2000, both entitled "Method And Apparatus For Providing Non-Photorealistic Cartoon Outlining Within A Graphics System",
- provisional Application No. 60/227,032, filed Aug. 23, 2000 and its corresponding utility application Ser. No. 09/726,225, filed Nov. 28, 2000, both entitled "Method And Apparatus For Providing Improved Fog Effects In A Graphics System",
- provisional Application No. 60/226,885, filed Aug. 23, 2000 and its corresponding utility application Ser. No. 09/722,664, filed Nov. 28, 2000, both entitled "Controller Interface For A Graphics System",
- provisional Application No. 60/227,033, filed Aug. 23, 2000 and its corresponding utility application Ser. No. 09/726,221, filed Nov. 28, 2000, both entitled "Method And Apparatus For Texture Tiling In A Graphics System",
- provisional Application No. 60/226,899, filed Aug. 23, 2000 and its corresponding utility application Ser. No. 09/722,667, filed Nov. 28, 2000, both entitled "Method And Apparatus For Pre-Caching Data In Audio Memory",
- provisional Application No. 60/226,913, filed Aug. 23, 2000 and its corresponding utility application Ser. No. 09/722,378, filed Nov. 28, 2000, both entitled "Z-Texturing",
- provisional Application No. 60/227,031, filed Aug. 23, 2000 entitled "Application Program Interface for a Graphics System",
- provisional Application No. 60/226,886, filed Aug. 23, 2000 and its corresponding utility application Ser. No. 09/722,665, filed Nov. 28, 2000, both entitled "Method and Apparatus for Accessing Shared Resources",
- provisional Application No. 60/226,894, filed Aug. 23, 2000 and its corresponding utility application Ser. No. 09/726,220, filed Nov. 28, 2000, both entitled "Graphics Processing System With Enhanced Memory Controller",
- provisional Application No. 60/226,914, filed Aug. 23, 2000 and its corresponding utility application Ser. No. 09/722,390, filed Nov. 28, 2000, both entitled "Low Cost Graphics System With Stitching Hardware Support For Skeletal Animation", and
- provisional Application No. 60/227,006, filed Aug. 23, 2000 and its corresponding utility application Ser. No. 09/722,421, filed Nov. 28, 2000, both entitled "Shadow Mapping In A Low Cost Graphics System".

FIELD OF THE INVENTION

The present invention relates to computer graphics, and more particularly to interactive graphics systems such as home video game platforms. Still more particularly this invention relates to a graphics system having a copy pipeline capable of performing various conversion and other processing operations when transferring image data between a reconfigurable embedded frame buffer and main memory.

The copy pipeline is used to selectively further process and selectively transfer image data to a display buffer or a texture buffer in main memory.

BACKGROUND AND SUMMARY OF THE INVENTION

Many of us have seen films containing remarkably realistic dinosaurs, aliens, animated toys and other fanciful creatures. Such animations are made possible by computer graphics. Using such techniques, a computer graphics artist can specify how each object should look and how it should change in appearance over time, and a computer then models the objects and displays them on a display such as your television or a computer screen. The computer takes care of performing the many tasks required to make sure that each part of the displayed image is colored and shaped just right based on the position and orientation of each object in a scene, the direction in which light seems to strike each object, the surface texture of each object, and other factors.

Because computer graphics generation is complex, computer-generated three-dimensional graphics just a few years ago were mostly limited to expensive specialized flight simulators, high-end graphics workstations and supercomputers. The public saw some of the images generated by these computer systems in movies and expensive television advertisements, but most of us couldn't actually interact with the computers doing the graphics generation. All this has changed with the availability of relatively inexpensive 3D graphics platforms such as, for example, the Nintendo 64® and various 3D graphics cards now available for personal computers. It is now possible to interact with exciting 3D animations and simulations on relatively inexpensive computer graphics systems in your home or office.

A problem graphics system designers confronted in the past was to provide a powerful yet inexpensive system which enables various data formats to be stored and processed thereby in a efficient and advantageous manner. Graphics chips used in graphics systems have included a local or on-chip memory for storing data as it is rendered by the graphics pipeline. When data is generated by the graphics chip it is transferred from the local memory to an external memory, where it can be used by, for example, a video interface unit to display the data on a display device. This external memory is typically part of the main memory of the graphics system and is referred to as the external frame buffer (XFB). The processing path of the data between the local memory and the external frame buffer may be referred to as the copy pipeline.

The local memory and the external frame buffer can have a variety of data formats for achieving various functionality in the graphics system. One problem that graphics system designers have faced in the past is to determine what format(s) of data to support in the local memory and the external frame buffer to enable advantageous and efficient use thereof by applications running on the system. Another problem graphics system designers have faced in the past is to find useful and efficient ways in which to maximize the speed, flexibility and overall operation of system. For example, one problem is to determine what elements in the system should be used to perform certain processes or functions and at what time such processes should be performed. Another problem relates to how to best take advantage of processing pipelines, such as the copy pipeline, which has been typically used to transfer data from a local memory of a graphics chip to the main memory of the system.

Various solutions to these problem were offered. For example, graphics systems have used a variety of data formats and have performed conversions between such formats at various points in the graphics processing operation, in an attempt to improve or maximize the overall operation of the system. While some work has been done in the past in connection with such memories, data formats and conversions further improvements are desirable. Specifically, further improvements are desired for high performance, low cost graphics systems, such as home video game systems.

The present invention addresses this problem by providing techniques and arrangements for use in connection with copying out data from an embedded frame buffer to main memory in a graphics system. The invention provides a copy out pipeline which advantageously enables further processing of data and/or data format conversions to be performed "on the fly" during the transfer of the data from the embedded frame buffer to an external destination, such as main memory. The invention further provides a copy pipeline that enables various pixel data formats to be advantageously used in the copy out operation. In addition, the copy pipeline of the invention enables data from the embedded frame buffer to be copied to main memory in a specific format for display or in a variety of texture formats for subsequent use as a texture in a graphics pipeline operation. The copy pipeline of the instant invention is particularly advantageous when used in systems designed for playing interactive 3D video games. In accordance with the instant invention, the embedded frame buffer can be reconfigured to and efficiently used in a variety of modes, including an anti-aliasing mode, a deflicker mode and a YUV (i.e. luma/chroma) mode, thereby increasing the flexibility of the system to support a variety of applications. The desired pixel format for each mode can be selected using, for example, a command to the graphics hardware on which the embedded frame buffer is provided. The copy pipeline can process and selectively further convert data in any of the formats supported by the embedded frame buffer.

In accordance with the invention, the copy pipeline is advantageously used to further process the data from the embedded frame buffer prior to storing the data in the external frame buffer. For example, the copy pipeline can be used to convert the data between a variety of useful formats to, for example, reduce the amount of memory needed to store the data, and/or provide the data in desired format for use in further processing by the graphics system. The copy pipeline can also be used to further process the frame data in a manner that improves the display quality and/or modifies the display characteristics.

In accordance with one aspect provided by the invention, the graphics system, includes an embedded frame buffer and a copy pipeline which transfers data from the embedded frame buffer to an external location, wherein the copy pipeline converts the data from one format to another format prior to writing the data to the external location. The external location may be a display buffer or a texture buffer in the main memory of the graphics system. The copy pipeline converts the data to a display format if the data is transferred to the display buffer and a texture format if the data is transferred to the texture buffer. The graphics pipeline is operable to use the data in the texture buffer during a subsequent rendering process. The copy pipeline selectively reads data from the embedded frame buffer in various RGB color formats or a YUV color format, and writes data to main memory in either a display format or a variety of texture formats.

In accordance with another aspect of the invention, a method of transferring data from a graphics chip to an external destination is provided. The method includes storing image data in an embedded frame buffer of the graphics chip, initiating a copy out operation for transferring data from the embedded frame buffer to the external destination, converting the data from one format to another format during the copy out operation, and writing the converted data to the external destination. The method includes either converting the data to a texture format and writing the texture format data to a texture buffer, or converting the data to a display format and writing the display format data to a display buffer. The copy pipeline is also operable to selectively perform scaling, gamma correction and/or anti-aliasing operations during the copy out process and prior to writing the data to main memory. The converting step includes performing at least one of the following conversions: RGB color format to another RGB color format; YUV color format to another YUV color format; RGB color format to YUV color format; and YUV color format to RGB color format.

BRIEF DESCRIPTION OF THE DRAWINGS

These and other features and advantages provided by the invention will be better and more completely understood by referring to the following detailed description of presently preferred embodiments in conjunction with the drawings, of which:

FIG. **1** is an overall view of an example interactive computer graphics system;

FIG. **2** is a block diagram of the FIG. **1** example computer graphics system;

FIG. **3** is a block diagram of the example graphics and audio processor shown in FIG. **2**;

FIG. **4** is a block diagram of the example 3D graphics processor shown in FIG. **3**;

FIG. **5** is an example logical flow diagram of the FIG. **4** graphics and audio processor;

FIG. **6** shows an exemplary embedded frame buffer and two RGB based formats used herein;

FIG. **7** shows the exemplary frame buffer of FIG. **6** reconfigured to store YUV formatted data;

FIG. **8** shows an exemplary interface between the pixel engine and the embedded frame buffer;

FIG. **9** shows an exemplary block diagram of the copy pipeline;

FIG. **10***a* illustrates an exemplary conversion of RGB format to YUV format;

FIG. **10***b* shows an exemplary block diagram of the data paths used for vertical scaling;

FIG. **11** is a block diagram of the graphics system showing how data moves between the various elements of the system;

FIG. **12** shows a more detailed block diagram of the copy pipeline of FIG. **9**;

FIG. **12***a* shows an exemplary 7 tap vertical filter used for anti-aliasing in accordance with a preferred embodiment of the instant invention;

FIG. **12***b* shows a block diagram of the anti-aliasing buffering used in accordance with a preferred embodiment of the instant invention;

FIG. **12***c* shows the vertical filter of FIG. **12***a* used for de-flickering;

FIG. **12***d* shows a block diagram of the de-flickering buffering used in accordance with a preferred embodiment of the instant invention;

FIG. **12***e* shows a conversion matrix in accordance with a preferred embodiment of the invention;

FIG. **12***f* shows texture tiles being stored in main memory;

FIG. **13** illustrates down sampling conversion from YUV444 format to YUV422 format;

FIGS. **14***a* and **14***b* illustrate two conversions used to convert data from YUV420 format to YUV444 format;

FIG. **15** shows an exemplary control register for use in defining a current pixel format;

FIG. **16** shows an exemplary register used in connection with a texture copy command; and

FIG. **17** shows an exemplary register used in connection with a display copy command; and

FIGS. **18**A and **18**B show example alternative compatible implementations.

DETAILED DESCRIPTION OF EXAMPLE EMBODIMENTS OF THE INVENTION

FIG. **1** shows an example interactive 3D computer graphics system **50**. System **50** can be used to play interactive 3D video games with interesting stereo sound. It can also be used for a variety of other applications.

In this example, system **50** is capable of processing, interactively in real time, a digital representation or model of a three-dimensional world. System **50** can display some or all of the world from any arbitrary viewpoint. For example, system **50** can interactively change the viewpoint in response to real time inputs from handheld controllers **52***a*, **52***b* or other input devices. This allows the game player to see the world through the eyes of someone within or outside of the world. System **50** can be used for applications that do not require real time 3D interactive display (e.g., 2D display generation and/or non-interactive display), but the capability of displaying quality 3D images very quickly can be used to create very realistic and exciting game play or other graphical interactions.

To play a video game or other application using system **50**, the user first connects a main unit **54** to his or her color television set **56** or other display device by connecting a cable **58** between the two. Main unit **54** produces both video signals and audio signals for controlling color television set **56**. The video signals are what controls the images displayed on the television screen **59**, and the audio signals are played back as sound through television stereo loudspeakers **61**L, **61**R.

The user also needs to connect main unit **54** to a power source. This power source may be a conventional AC adapter (not shown) that plugs into a standard home electrical wall socket and converts the house current into a lower DC voltage signal suitable for powering the main unit **54**. Batteries could be used in other implementations.

The user may use hand controllers **52***a*, **52***b* to control main unit **54**. Controls **60** can be used, for example, to specify the direction (up or down, left or right, closer or further away) that a character displayed on television **56** should move within a 3D world. Controls **60** also provide input for other applications (e.g., menu selection, pointer/cursor control, etc.). Controllers **52** can take a variety of forms. In this example, controllers **52** shown each include controls **60** such as joysticks, push buttons and/or directional switches. Controllers **52** may be connected to main unit **54** by cables or wirelessly via electromagnetic (e.g., radio or infrared) waves.

To play an application such as a game, the user selects an appropriate storage medium **62** storing the video game or other application he or she wants to play, and inserts that

storage medium into a slot **64** in main unit **54**. Storage medium **62** may, for example, be a specially encoded and/or encrypted optical and/or magnetic disk. The user may operate a power switch **66** to turn on main unit **54** and cause the main unit to begin running the video game or other application based on the software stored in the storage medium **62**. The user may operate controllers **52** to provide inputs to main unit **54**. For example, operating a control **60** may cause the game or other application to start. Moving other controls **60** can cause animated characters to move in different directions or change the user's point of view in a 3D world. Depending upon the particular software stored within the storage medium **62**, the various controls **60** on the controller **52** can perform different functions at different times.

Example Electronics of Overall System

FIG. **2** shows a block diagram of example components of system **50**. The primary components include:

a main processor (CPU) **110**,

a main memory **112**, and

a graphics and audio processor **114**.

In this example, main processor **110** (e.g., an enhanced IBM Power PC 750) receives inputs from handheld controllers **108** (and/or other input devices) via graphics and audio processor **114**. Main processor **110** interactively responds to user inputs, and executes a video game or other program supplied, for example, by external storage media **62** via a mass storage access device **106** such as an optical disk drive. As one example, in the context of video game play, main processor **110** can perform collision detection and animation processing in addition to a variety of interactive and control functions.

In this example, main processor **110** generates 3D graphics and audio commands and sends them to graphics and audio processor **114**. The graphics and audio processor **114** processes these commands to generate interesting visual images on display **59** and interesting stereo sound on stereo loudspeakers **61**R, **61**L or other suitable sound-generating devices.

Example system **50** includes a video encoder **120** that receives image signals from graphics and audio processor **114** and converts the image signals into analog and/or digital video signals suitable for display on a standard display device such as a computer monitor or home color television set **56**. System **50** also includes an audio codec (compressor/decompressor) **122** that compresses and decompresses digitized audio signals and may also convert between digital and analog audio signaling formats as needed. Audio codec **122** can receive audio inputs via a buffer **124** and provide them to graphics and audio processor **114** for processing (e.g., mixing with other audio signals the processor generates and/or receives via a streaming audio output of mass storage access device **106**). Graphics and audio processor **114** in this example can store audio related information in an audio memory **126** that is available for audio tasks. Graphics and audio processor **114** provides the resulting audio output signals to audio codec **122** for decompression and conversion to analog signals (e.g., via buffer amplifiers **128**L, **128**R) so they can be reproduced by loudspeakers **61**L, **61**R.

Graphics and audio processor **114** has the ability to communicate with various additional devices that may be present within system **50**. For example, a parallel digital bus **130** may be used to communicate with mass storage access device **106** and/or other components. A serial peripheral bus **132** may communicate with a variety of peripheral or other devices including, for example:

a programmable read-only memory and/or real time clock **134**,

a modem **136** or other networking interface (which may in turn connect system **50** to a telecommunications network **138** such as the Internet or other digital network from/to which program instructions and/or data can be downloaded or uploaded), and

flash memory **140**.

A further external serial bus **142** may be used to communicate with additional expansion memory **144** (e.g., a memory card) or other devices. Connectors may be used to connect various devices to busses **130**, **132**, **142**.

Example Graphics and Audio Processor

FIG. **3** is a block diagram of an example graphics and audio processor **114**. Graphics and audio processor **114** in one example may be a single-chip ASIC (application specific integrated circuit). In this example, graphics and audio processor **114** includes:

a processor interface **150**,

a memory interface/controller **152**,

a 3D graphics processor **154**,

an audio digital signal processor (DSP) **156**,

an audio memory interface **158**,

an audio interface and mixer **160**,

a peripheral controller **162**, and

a display controller **164**.

3D graphics processor **154** performs graphics processing tasks. Audio digital signal processor **156** performs audio processing tasks. Display controller **164** accesses image information from main memory **112** and provides it to video encoder **120** for display on display device **56**. Audio interface and mixer **160** interfaces with audio codec **122**, and can also mix audio from different sources (e.g., streaming audio from mass storage access device **106**, the output of audio DSP **156**, and external audio input received via audio codec **122**). Processor interface **150** provides a data and control interface between main processor **110** and graphics and audio processor **114**.

Memory interface **152** provides a data and control interface between graphics and audio processor **114** and memory **112**. In this example, main processor **110** accesses main memory **112** via processor interface **150** and memory interface **152** that are part of graphics and audio processor **114**. Peripheral controller **162** provides a data and control interface between graphics and audio processor **114** and the various peripherals mentioned above. Audio memory interface **158** provides an interface with audio memory **126**.

Example Graphics Pipeline

FIG. **4** shows a more detailed view of an example 3D graphics processor **154**. 3D graphics processor **154** includes, among other things, a command processor **200** and a 3D graphics pipeline **180**. Main processor **110** communicates streams of data (e.g., graphics command streams and display lists) to command processor **200**. Main processor **110** has a two-level cache **115** to minimize memory latency, and also has a write-gathering buffer **111** for uncached data streams targeted for the graphics and audio processor **114**. The write-gathering buffer **111** collects partial cache lines into full cache lines and sends the data out to the graphics and audio processor **114** one cache line at a time for maximum bus usage.

Command processor **200** receives display commands from main processor **110** and parses them—obtaining any additional data necessary to process them from shared memory **112**. The command processor **200** provides a stream

of vertex commands to graphics pipeline **180** for 2D and/or 3D processing and rendering. Graphics pipeline **180** generates images based on these commands. The resulting image information may be transferred to main memory **112** for access by display controller/video interface unit **164**—which displays the frame buffer output of pipeline **180** on display **56**.

FIG. **5** is a logical flow diagram of graphics processor **154**. Main processor **110** may store graphics command streams **210**, display lists **212** and vertex arrays **214** in main memory **112**, and pass pointers to command processor **200** via bus interface **150**. The main processor **110** stores graphics commands in one or more graphics first-in-first-out (FIFO) buffers **210** it allocates in main memory **110**. The command processor **200** fetches:

- command streams from main memory **112** via an on-chip FIFO memory buffer **216** that receives and buffers the graphics commands for synchronization/flow control and load balancing,
- display lists **212** from main memory **112** via an on-chip call FIFO memory buffer **218**, and
- vertex attributes from the command stream and/or from vertex arrays **214** in main memory **112** via a vertex cache **220**.

Command processor **200** performs command processing operations **200***a* that convert attribute types to floating point format, and pass the resulting complete vertex polygon data to graphics pipeline **180** for rendering/rasterization. A programmable memory arbitration circuitry **130** (see FIG. **4**) arbitrates access to shared main memory **112** between graphics pipeline **180**, command processor **200** and display controller/video interface unit **164**.

FIG. **4** shows that graphics pipeline **180** may include:

- a transform unit **300**,
- a setup/rasterizer **400**,
- a texture unit **500**,
- a texture environment unit **600**, and
- a pixel engine **700**.

Transform unit **300** performs a variety of 2D and 3D transform and other operations **300***a* (see FIG. **5**). Transform unit **300** may include one or more matrix memories **300***b* for storing matrices used in transformation processing **300***a*. Transform unit **300** transforms incoming geometry per vertex from object space to screen space; and transforms incoming texture coordinates and computes projective texture coordinates (**300***c*). Transform unit **300** may also perform polygon clipping/culling **300***d*. Lighting processing **300***e* also performed by transform unit **300***b* provides per vertex lighting computations for up to eight independent lights in one example embodiment. Transform unit **300** can also perform texture coordinate generation (**300***c*) for embossed type bump mapping effects, as well as polygon clipping/culling operations (**300***d*).

Setup/rasterizer **400** includes a setup unit which receives vertex data from transform unit **300** and sends triangle setup information to one or more rasterizer units (**400***b*) performing edge rasterization, texture coordinate rasterization and color rasterization.

Texture unit **500** (which may include an on-chip texture memory (TMEM) **502**) performs various tasks related to texturing including for example:

- retrieving textures **504** from main memory **112**,
- texture processing (**500***a*) including, for example, multi-texture handling, post-cache texture decompression, texture filtering, embossing, shadows and lighting through the use of projective textures, and BLIT with alpha transparency and depth,
- bump map processing for computing texture coordinate displacements for bump mapping, pseudo texture and texture tiling effects (**500***b*), and
- indirect texture processing (**500***c*).

Texture unit **500** outputs filtered texture values to the texture environment unit **600** for texture environment processing (**600***a*). Texture environment unit **600** blends polygon and texture color/alpha/depth, and can also perform texture fog processing (**600***b*) to achieve inverse range based fog effects. Texture environment unit **600** can provide multiple stages to perform a variety of other interesting environment-related functions based for example on color/alpha modulation, embossing, detail texturing, texture swapping, clamping, and depth blending.

Pixel engine **700** performs depth (z) compare (**700***a*) and pixel blending (**700***b*). In this example, pixel engine **700** stores data into an embedded (on-chip) frame buffer memory **702**. Graphics pipeline **180** may include one or more embedded DRAM memories **702** to store frame buffer and/or texture information locally. Z compares **700***a*' can also be performed at an earlier stage in the graphics pipeline **180** depending on the rendering mode currently in effect (e.g., z compares can be performed earlier if alpha testing is not required). The pixel engine **700** includes a copy operation **700***c* that periodically writes on-chip frame buffer **702** to main memory **112** for access by display/video interface unit **164**. This copy operation **700***c* can also be used to copy embedded frame buffer **702** contents to textures in the main memory **112** for dynamic texture synthesis effects. Anti-aliasing and other filtering can be performed during the copy-out operation. The frame buffer output of graphics pipeline **180** (which is ultimately stored in main memory **112**) is read each frame by display/video interface unit **164**. Display controller/video interface **164** provides digital RGB pixel values for display on display **102**.

Example Configurations for the Embedded Frame Buffer

As generally shown in FIG. **4**, the embedded frame buffer **702** receives data from the graphics pipeline **180**. The graphics pipeline renders primitives in RGB(A) format. Thus, as will be explained in more detail below, the embedded frame buffer **702** can be configured to store pixel data in various RGB(A) formats. As can be seen in FIG. **4**, the processor interface **150** can be used, not only to supply data to the graphics pipeline **180**, but also to enable the main processor (CPU) **110** to load data directly into the embedded frame buffer. This direct loading of the embedded frame buffer by the CPU enables pixel formats other than RGB-type formats to be sent to the embedded frame buffer, thereby increasing the flexibility of the system to support a variety of applications. Specifically, the processor interface **150** enables the main processor **110** to load pixel data in YUV format (i.e. luma/chroma format) into the embedded frame buffer from, for example, an optical disk or other storage media. Once YUV format data is in the embedded frame buffer, it can be copied out to main memory in various texture formats, using the copy pipeline, for use as a texture by the texture environment unit (TEV) during a later rendering process. Thus, in accordance with the instant invention, the embedded frame buffer is reconfigurable between various RGB(A) formats and a YUV format. Each of these formats will be described in detail below.

Example RGB(A) Formats for the Embedded Frame Buffer

In this example, the embedded frame buffer (EFB) has a memory capacity of approximately 2 MB. The maximum pixel width and height of the frame buffer is determined by the size of each pixel. In accordance with the invention, and

as shown in FIG. **6**, there are two different RGB pixel sizes that can be used for data in the embedded frame buffer **702**. These sizes are:

48-bit color and Z; and

96-bit super-sampled color and Z

48-Bit Pixel Size Configuration

The 48-bit format for the embedded frame buffer (EFB) is preferably intended for non-anti-aliasing, and has the following features:

24-bit color (either 8/8/8 with no alpha, or 6/6/6/6 with 6 bits of alpha)

24-bit Z.

In this non-anti-aliasing mode, the 48-bit format can, in this example, support a maximum resolution of 640×528. Thus, the width must be between 0–640 and the EFB stride is fixed at 640 pixels. This non-antaliasing mode is based on a single point sample within each pixel. As indicated above, the point sample of each pixel is given a 24-bit color value and a 24-bit Z value. The color value may have 8 bits each for red, green and blue values when no alpha is used, or it may have 6 bits each for red, green, blue and alpha.

96-Bit Pixel Size Configuration

The 96-bit super-sampling pixel format is preferably used for anti-aliasing and has the following features:

3 samples of 16-bit color (5 bits of Red, 6 bits of Green, 5 bits of Blue, no alpha)

3 samples of 16-bit Z (depth).

This 96-bit format can support a maximum resolution of 640×264. The width is preferably between 0–640 and the stride is fixed at 640.

In this example, the 96-bit format is used for anti-aliasing. However, this format may be used to achieve functionality other than anti-aliasing where three supersamples per pixel are desired. In other words, the 96-bit format provides the ability to store three samples (super-samples) for each pixel, as opposed to the single point sample per pixel as used in the 48-bit configuration.

As can be seen from the above, there are inherent tradeoffs between the 48-bit and 96-bit pixel formats. While the 96-bit anti-aliasing format enables an increase visual quality on the polygon edges and intersections, it does cost performance and Z quality. The 96 bit super-sampling EFB format requires twice as much memory as 48-bit point sampled pixels. This mode also reduces Z buffering precision to 16 bits rather than 24 bits in other formats. In this example, anti-aliasing also reduces peak fill rate from 800 Mpixels/s to 400 Mpixels/s. However, if more than one stage is employed in the texture environment unit (TEV), this reduction is hidden, in that, in this example, using two TEV stages also reduces the fill rate to 400 Mpixels/s.

In one embodiment, the rendering rate with anti-aliasing activated drops down to two pixels/clock due to the embedded frame buffer **702** bandwidth limitations. However, if two or more textures are turned on, the rate at which pixel quads are sent to the pixel engine **700** drops down to less than or equal to one pixel quad every two clocks in this particular embodiment. In this case, turning on anti-aliasing will not impact fill rate. Thus, if a particular scene is geometry-limited, then anti-aliasing will not adversely impact rendering performance. On the other hand, if a particular scene is fill-limited, rendering performance may be substantially adversely impacted by activating anti-aliasing as opposed to using the point sampled mode. The same application can activate and deactivate anti-aliasing for different scenes and different images depending on whether the scenes or images are geometry-limited or fill-limited—or depending upon the image quality required in a particular scene or image. The ability to dynamically change the pixel format in the frame buffer to, for example, activate and deactivate anti-aliasing, on a frame-by-frame basis provides great flexibility in allowing an application programmer to make tradeoffs between image quality and speed performance.

Anti-Aliasing Using the 96-Bit Configuration

The particular and preferred anti-aliasing methods and arrangements for use in connection with the instant invention are disclosed in commonly owned and co-pending application Ser. No. 09/726,226, filed Nov. 28, 2000 and entitled "Method and Apparatus For Anti-Aliasing In A Graphics System", which is incorporated by reference herein in its entirety. A brief explanation of this anti-aliasing is provided below, in order to give a more complete understanding of the 96-bit pixel format for the embedded frame buffer.

In accordance with the anti-aliasing embodiment, anti-aliasing is performed in two main phases. In the first phase, data is loaded into the embedded frame buffer using three supersamples per pixel and the 96-bit pixel EFB format. In the second phase the data is read (or copied out) from the embedded frame buffer and further processed by the copy pipeline. The 96-bit format is particularly advantageous for achieving the first phase of anti-aliasing, however, it can be used for any other suitable purpose as well.

In this example anti-aliasing use of the 96-bit format, the first anti-aliasing phase occurs when the rasterizer is performing edge rasterization into the embedded frame buffer (EFB) **702**. Preferably, this rasterizer is an edge and z rasterizer which generates x, y, z and coverage mask values for programmable super-sample locations within every visible pixel quad contained by the current triangle or other primitive being rendered. The pixel quads have three programmable subpixel locations within each pixel. The pixel quad includes 4 pixels in a 2×2 configuration. Within each pixel in the quad, three super-sample locations are programmably selected and specified. Preferably, the programmer can set the subsample locations by writing global registers. Since the location of each of the super-samples in each pixel is programmable in the example embodiment, the particular sampling locations for each quad can be changed as desired for the particular application. On the other hand, in alternative embodiments, a particularly optimal multisample location values could be fixed (e.g., set in hardware) so the application programmer does not need to worry about it. Thus, while the locations are programmable in the example embodiment, a hardwired optional pattern could be used in lieu of programmability. Whatever pattern is selected, it can be repeated across a certain number of neighboring pixels in a frame.

Once all of the primitives have been rendered for a frame, the embedded frame buffer will contain super-sampled pixel information for an entire frame. Due to the fact that three supersamples are provided for each pixel, and each sample includes 16 bit color values and a 16 bit z value, each pixel is represented by 96-bits in the embedded frame buffer. The embedded frame buffer is then ready for use by the copy pipeline, wherein the second phase of anti-aliasing can be performed. This second phase will be described in more detail below in connection with the copy pipeline. Further details regarding anti-aliasing are provided in the co-pending applications identified above.

YUV Embedded Frame Buffer Configuration

FIG. **7** shows a further configuration for the embedded frame buffer **702** which is designed to store pixel data in

YUV (luma/chroma) format which, for example, enables motion compensation under the MPEG standards (e.g. MPEG2) to be supported by the system. In this YUV configuration, the color buffer is preferably partitioned to store Y (720×576), U (360×288) and V (360×288) image planes for a YUV 4:2:0 frame. The partitioning of the color buffer preferably allocates as follows:

1024×640 8 bit Y image;

528×320 8 bit U image; and

528×320 8 bit V image.

The preferred location of the images are shown in FIG. **7**. The YUV data is preferably loaded into the embedded frame buffer by the main processor from an externally supplied medium, such as an optical disk or the like, or from any other suitable source other than the graphics pipe. It is noted, however, that the graphics pipeline can provide single component Y or U or V images, but it cannot draw three component YUV pixels. As will be explained in detail below, the YUV data in the embedded frame buffer can be further processed by the copy pipeline to either display the data or to convert the data to texture data for subsequent use by the graphics pipeline.

Example Pixel Format Command

As explained above, the embedded frame buffer **702** can be selectively configured to support two RGB(A) pixel formats (48-bit and 96-bit) and a YUV format. The desired pixel format can preferably be set on a frame-by-frame basis using the API. An example API function for this purpose is as follows:

GXSetPixelFormat:

Argument:

GXPixelFormats	Format	//Sets pixel format for frame buffer
GXZCmprFormats	ZCmpr	//Sets compression format for 16 bit z
GXBool	Ztop	//Z compare before texture

This function sets the format of the embedded frame buffer. The function is called before any drawing operations are performed. The pixel format cannot be changed in the middle of a frame in the example embodiment. The 16 bit Z values (in multisample or anti-aliasing mode) can be uncompressed or compressed. The compressed values give a better precision and range. The Ztop flag can be used to perform depth comparisons before texture mapping (Z-before-texture). This can improves the texture bandwidth because less texels need to be fetched and filtered.

Interface Between the Pixel Engine and the Embedded Frame Buffer

An exemplary interface between the pixel engine **700** and the embedded frame buffer **702** is shown in FIG. **8**. Preferably, as shown in FIG. **8**, there are 4 copies of the embedded frame buffer (**702***a*, **702***b*, **702***c* and **702***d*)—2 for color and 2 for Z. In this example, a read or write access to the embedded frame buffer from the pixel engine transfers 96 bits of data or 4 quads of color and Z. There are 4 address/control and read buses to the core of each of the buffers. The Z channels A and B preferably share a write port **703***a*, and the color channels A and B preferably share a separate write port **703***b*. The embedded frame buffer preferably has enough bandwidth to blend 4 pixels per clock for peak filtrate of 800M pixels per second. The maximum size of the embedded frame buffer is 640×528×24b color and 24b Z. The embedded frame buffer is single-buffered and expected to transfer a finished image to the external frame buffer for display. Double buffered display is achieved in this manner. The address/control, read and write buses shown in FIG. **8** are defined in the following table:

PE-EFB Interface

Name:	Description:
za_addr (16:0)	Z channel A quad address. There are 3 subfields: 3:0 column(3:0) valid range is 0 to 9 10:4 row(7:0) valid range 0 to 127 16:11 bank(5:0) valid range is 0 to 32
za_reb	Z change A read enable (active low).
za_web	Z channel A write enable (active low).
za_din(95:0)	Z channel A quad read bus. 4 × 24 bit Z for a quad. (23:0) Z for the upper left pixel in the quad (47:24) Z for the upper right pixel in the quad (63:48) Z for the lower left pixel in the quad (95:64) Z for the lower right pixel in the quad
zdout (95:0)	Z channels A and B quad Z write bus. 4 × 24 bit Z for the quad Refer to za_din for pixel locations on the bus
zb_addr (16:0)	Z channel B quad address (refer to za_addr for bit-fields)
zb_reb	Z channel B read enable (active low)
zb_web	Z channel B write enable (active low)
zb_din (95:0)	Z channel B quad read bus (refer to za_din for pixel locations)
ca_addr (16:0)	C channel A quad address. There are 3 subfields: 3:0 column(3:0) valid range is 0 to 9 10:4 row(7:0) valid range 0 to 127 16:11 bank(5:0) valid range is 0 to 32
ca_reb	Color channel A read enable (active low)
ca_web	Color channel A write enable (active low)
ca_din (95:0)	Color channel A quad read bus. 4 × 24 bit color for a quad. (23:0) color for the upper left pixel in the quad (47:24) color for the upper right pixel in the quad (63:48) color for the lower left pixel in the quad (95:64) color for the lower right pixel in the quad
Cdout (95:0)	Color channels A and B quad color write bus. 4 × 24 bit color for the quad Refer to ca_din for pixel locations on the bus.
cb_addr (16:0)	Color channel B quad address (refer to ca_addr for bit-fields)
cb_reb	Color channel B read enable (active low)
cb_web	Color channel B write enable (active low)
cb_din (95:0)	Color channel B quad read bus (refer to ca_din for pixel locations)

Example Copy Out Operations and Pipeline

Copy out operations, implemented in this example through what is referred to as the copy pipeline, is used to further process the pixel data from the embedded frame buffer (EFB) and to ultimately write the frame data in a selected format into the external frame buffer (XFB) **113** of main memory **112** as display data for display by the video interface or as texture data for later use by the graphics pipeline (see FIG. **11**). RGB(A) or YUV data in the EFB can be copied out to main memory as YUV, fields or frames. YUV data in the EFB is copied out in scan-line order. There is a stride to allow skipping memory bytes between scan lines. Y8 is the lowest address, followed by U8, Y8 and V8. Copying in YUV format reduces the amount of memory used in main memory by ⅓.

A general block diagram of the copy pipeline, as it mainly relates to the processing of data from the EFB when in either of the two RGB(A) pixel configurations, is shown in FIG. **9**. As shown in FIG. **9**, this aspect of the copy pipeline includes an anti-alias/deflicker section **622**, a gamma correction section **623**, an RGB to YUV conversion section **624**, and a Y scale section **626**.

A more complete block diagram of the copy out pipeline for all EFB configurations (i.e. RGB(A) and YUV) is shown in FIG. **12**. FIG. **11** shows the various paths that data can take between the various elements of the system. As shown in FIG. **12**, in order to reduce the amount of buffering needed for filtering operation in this example, a copy rectangle is broken into 32×32 tiles. The tiles are double buffered by using two tile buffers **625***a* and **625***b*, so that while one tile is being filled, the other is being read and processed to be sent to main memory. A rectangle is preferably decomposed into tiles in the Y direction, followed by tiles in the X direction. Within a tile 4 pixels in a span are processed in one cycle. The pixel quads are processed in Y order followed by X.

Referring now more particularly to FIG. **12**, the particular copy pipeline operation depends on the particular configuration of the data in the embedded frame buffer and on the programmers desired result of the copy out operation. As explained above, the color buffer may contain RGB8, RGBA6, R5G6B5 (anti-aliasing) or YUV420 data, and the Z buffer may contain 24-bit Z or 3×16-bit Z (anti-aliasing). FIG. **12***e* shows a preferred conversion matrix for the various data formats available in this example.

If the embedded frame buffer is configured for and contains data in any of the RGB(A) formats describe above, the copy pipeline performs anti-aliasing/deflickering operations, preferably using a programmable 7-tap vertical filter, as illustrated by block **628** in FIG. **12**. As described in greater detail below, this filter blends the point sampled or supersampled (anti-aliasing) pixel data from multiple pixels and outputs a resulting pixel color. Once blended, gamma correction is performed, as illustrated by block **623**. An optional conversion can then be performed, if desired for the particular application, to convert the RGB data to YUV444 format (block **641**). If the data was converted to YUV 444 at block **641**, then another optional conversion can be performed at block **644** to convert from YUV444 to YUV422. If the copy pipe is being used for display, this conversion to YUV422 can be performed to put the data in main memory display format, which is YUV422 in this example. The tile data is then buffered at tile buffers **625***a* and **625***b* as explained above. Then, if the tile is intended for display, Y scaling is performed at block **626**, and the scaled data is copied out to main memory in YUV422 format (block **642**) for use by the video interface. On the other hand, if the data is intended to be used as a texture, Y scaling is not performed. Instead, the tile data is formatted into the desired texture at block **640** and sent to main memory as a texture tile for possible use in a subsequent graphics pipeline operation. The possible texture formats in this example are shown in FIG. **12***e* and are listed below in connection with the texture copy commands and register bit definitions.

If the embedded frame buffer is configured for and holds data in YUV420 format as described above, the copy pipeline has a slightly different operation as shown by the lower portion of FIG. **12**. Specifically, the YUV420 data from the color buffer is first converted to YUV444 format (block **646**). An optional conversion from YUV444 to RGB can then be performed at block **648**. The data path is then the same as described above with respect to the RGB(A) configurations. That it, the tile can be optionally converted, at block **644**, to YUV422 (if previously converted to YUV444), then buffered and either scaled and sent to main memory as display data or converted to a desired texture format and stored as a texture tile in main memory. FIG. **12***f* shows an example of how texture tiles (e.g. tiles **1**–**4**) are stored in main memory.

Textures can be created by copying the Embedded Frame Buffer (EFB) to main memory using the GXCopyTex function. This is useful when creating dynamic shadow maps, environment maps, motion blur effects, etc.

All non-color index texture types except compressed textures (GX_TF_CMPR) can be created during the copy. The texture copy operation will create the correct tiling and formatting of the texture so it can be read directly by the hardware. Optionally, a box filter can be applied to the image in the EFB in order to create a lower level of detail (LOD) texture. The box filter can be used to create mipmaps from the EFB data. The following table shows exemplary texture copy formats and conversion notes.

Format	Conversion
GX_TF_I4	RGB -> (Y)UV, AA and non-AA pixel formats
GX_TF_I8	RGB -> (Y)UV, AA and non-AA pixel formats
GX_TF_A8	A (6 bits) -> A (8-bits, 2 MSBs replicated in LSBs), only with pixel format GX_PF_RGBA6_Z24
GX_TF_IA4	RGBA -> (Y)UV(A), if pixel format is not GX_PF_RGBA6_Z24, then A = 0×f
GX_TF_IA8	RGBA -> (Y)UV(A), if pixel format is not GX_PF_RGBA6_Z24, then A = 0×ff
GX_TF_RGB565	RGB -> RGB, bits truncated for non-AA pixel formats.
GX_TF_RGB5A3	RGBA -> RGBA, if pixel format is not GX_PF_RGBA6_Z24, then MSB = 1. i.e., R5G5B5
GX_TF_RGBA8	RGBA -> RGBA, if pixel format is not GX_PF_RGBA6_Z24, then A = 0×ff
GX_TF_Z24X8	Z (24 bits) -> Z (32 bits), only when pixel format is non-antialiase, GB_PF_RGB8_Z24 or GX_PF_RGBA6_Z24

Normally, the source and destination rectangles would have the same size. However, when copying small textures that will be composited into a larger texture the source and destination rectangles may differ. The format GX_TF_A8 is used specifically to copy the alpha channel from the EFB into a GX_TF_I8 formatted texture. The GX_TF_I8 will copy the luminance of the EFB into a GX_TF_I8 texture. When reading a texture, GX_TF_A8 and GX_TF_I8 are equivalent. When color textures are converted from an GX_PF_RGB8_Z24 pixel format to a lower-resolution color format, like GX_TF_RGB565, the least significant bits (LSBs) of the 8-bit colors are truncated. When color textures are converted from a lower resolution pixel format, such as GX_PF_RGB565_Z16, to a higher resolution texture format, such as GX_TF_RGB8, the most significant bits (MSBs) of each pixel are replicated in the LSBs of each texel. This conversion process distributes the estimation error evenly and allows each texel to represent the minimum or maximum value. In general, one should only copy textures containing alpha from an EFB with format GX_PF_RGBA6_Z24. When copying texture containing alpha from an EFB without alpha, alpha will be set to its maximum value. The GX_TF_Z24X8 format can be used to copy the 24-bit Z buffer to a 32-bit texture (equivalent format to GX_TF_RGBA8). To copy a texture, the application preferably first allocates a buffer in main memory the size of the texture to be copied. This size can be determined using, for example, a GXGetTexBufferSize function. This function preferably takes into account texture padding and texture type in its calculations.

As can be seen from the above description, the copy out process in accordance with the instant invention enables various data formats to be used and various conversions/operations to be performed such that significant flexibility and functionality is provided thereby. By supporting YUV formats and enabling copy out as a texture, the copy pipeline line can be used to, for example, assist the main processor in performing motion compensation. The copy out process as described above can be used not only to efficiently move and process data from the embedded frame buffer to the external frame buffer for display or as texture, but it also enables, for example, streaming video to be superimposed on a polygon by using the texture copy feature based on MPEG data which uses the YUV color space.

Each of the copy pipeline operations described above are explained in greater detail below.

Exemplary Anti-Aliasing During Copy Out

As briefly explained above, when anti-aliasing is desired and the embedded frame buffer is configured for the 96-bit anti-aliased pixel data (e.g. R5G6B5 and Z16), a second stage of anti-aliasing can be performed during copy out. Specifically, the second stage of anti-aliasing is performed by the anti-aliasing/deflicker section **622** during copy-out from the embedded frame buffer (EFB) **702** to the external frame buffer (XFB) **113**.

The anti-aliasing/deflickering section **622** of the copy pipeline preferably applies a 7 tap vertical filter **628** (see FIG. **12***a*) having programmable weightings (W**0**–W**6**) for each super-sample. The support for the vertical filter is preferably a three-vertical-pixel area. Thus, when determining color for a current pixel N in anti-aliasing mode, super-samples in the pixel immediately above the current pixel (N−1), and super-samples in the pixel immediately below the current pixel (N+1), as well as super-samples in the current pixel are preferably used. Preferably, the farthest sample from the current pixel within each of the two surrounding pixels is not used in the filtering operation. Thus, while the three pixel support for the filter has nine samples, only seven of the nine samples are used in the blending operation in the example embodiment. The resulting vertical filter output provides a single screen pixel color value (N') for eventual copying into the external frame buffer and display on display device **56**.

In order to avoid the use of full line buffers, the copy operation preferably uses anti-aliasing (AA) buffering, wherein the copy is performed in strips of 32 pixels wide (X axis). The data-path for the strip-buffers in this exemplary AA buffering is shown in the block diagram of FIG. **12***b*.

It is noted that additional details regarding anti-aliasing/de-flickering techniques and arrangements are provided in the commonly owned and co-pending application identified above. Inasmuch as this invention is directed to the embedded frame buffer and the overall copy out operation, regardless of the specific anti-aliasing operation used, further details regarding anti-aliasing are not provided herein.

Exemplary De-Flicker Filtering During Copy Out

The same vertical filter can be used during copy-out in a non-anti-aliasing mode to achieve a de-flickering function using point sampled pixels. In this mode, the sample patterns are not programmable. As shown in FIG. **12***c*, the hardware uses only the center of the pixel as the sample locations. The weighting coefficients (W**0**–W**6**) for each point sample are programmable as with the anti-aliasing filter. Thus, the vertical filter **628***a* in de-flickering mode uses three inputs (center only) from the current pixel and two inputs (center only) from each of the two vertically neighboring pixels, thereby obtaining the seven values for the filtering operation. The programmable weighting coefficients are applied to the seven samples, and then the results are added to obtain the final pixel color (N'). Preferably, the de-flickering filter and AA filter are shared. The four strip buffers used in the AA data path (see FIG. **12***b*) are also used to store quad strips. An exemplary block diagram of the data-path for de-flicker buffering is shown in FIG. **12***d*. Further details regarding de-flickering are provided in the co-pending application identified above.

Example RGB to YUV Conversion During Copy Out

A luma/chroma (YUV) format stores the same visual quality pixel as RGB, but requires only two-thirds of the memory. Therefore, during the copy operation, the RGB(A) format in the EFB is converted to a YUV format in the XFB, in order to reduce the amount of main memory used for the external frame buffer (XFB). This conversion is done by the RGB to YUV section **624**. An illustration of the conversion operation is shown in FIG. **10***a*, wherein the RGB data is initially converted to YUV444 format and then down-sampled to YUV 422 format for storage in the XFB as display data.

Vertical (Y) Scaling During Copy Out

The Y scale section **626** in the copy pipeline enables arbitrary scaling of a rendered image in the vertical direction. Horizontal scaling is preferably done during video display. A Y scale factor is defined in the API and determines the number of lines that will be copied, and can be used to compute the proper XFB size. A block diagram for the preferred vertical scaling in accordance with the instant invention is shown in FIG. **10***b*. Vertical scaling is performed by using 8-bit lerps between 2 adjacent vertically adjacent strips. The lerp coefficient starts at 1.0. After a scan-line is outputted a fixed point (1.8) value is added to the lerp coefficient. The carry out of the lerp coefficients signals that a new scan-line is to be used. Two strip buffers **626***a* and **626***b* are used to keep 2 partial scan-lines that are on top of each other. Buffer A (**626***a*) holds all incoming strips with even y value, while buffer B (**626***b*) holds all the odd y value strips.

Gamma Correction During Copy Out

The gamma correction section **623** is used to correct for the non-linear response of the eye (and sometimes the monitor) to linear changes in color intensity values. Three choices of gamma may be provided (such as 1.0, 1.7 and 2.2). The default gamma is preferably 1.0 and is set in, for example, a GXInit command in the API.

Example Conversion Operations Usable During Copy Out

RGB to YCrCb(4:4:4) Conversion

This conversion is used to reduce the amount of external frame-buffer needed by ⅓. The following equations are used for the conversion:

$$Y=0.257\ R+0.504\ G+0.098\ B+16$$

$$Cb=-0.148\ R-0.291\ G+0.439\ B+128$$

$$Cr=0.439\ R-0.368\ G-0.071\ B+128$$

Four pixels in a scan-line are converted in one cycle.

YCrCb(4:4:4) to YCrCb(4:2:2)

An illustration of the YUV444 to YUV422 conversion is shown in FIG. **13**. The following equations are used for this conversion:

$$c'(0,0)=\tfrac{1}{4}*c(0,0)+\tfrac{1}{2}*c(0,0)++\tfrac{1}{4}*c(1,0)$$

$$c'(2,0)=\tfrac{1}{4}*c(1,0)+\tfrac{1}{2}*c(2,0)+\tfrac{1}{4}*c(3,0)$$

$$c'(4,0)=\tfrac{1}{4}*c(3,0)+\tfrac{1}{2}*c(4,0)+\tfrac{1}{4}*c(5,0)$$

$$c'(m,n)=\tfrac{1}{4}*c(m-1,n)+\tfrac{1}{2}*c(m,n)+\tfrac{1}{4}*c(m+1,n)$$

YCrCb(4:2:0) to YCrCb(4:4:4)

This conversion is done in two parts, as illustrated in FIGS. **14***a* and **14***b*. The first part, shown in FIG. **14***a*, converts from YUV420 format to YUV422 format. This conversion uses the following equations:

$$c'(0,0)=\tfrac{3}{4}*c(0,0.5)+\tfrac{1}{4}*c(0,0.5)$$

$$c'(2,0)=\tfrac{3}{4}*c(2,0.5)+\tfrac{1}{4}*c(2,0.5)$$

$$c'(4,0)=\tfrac{3}{4}*c(4,0.5)+\tfrac{1}{4}*c(4,0.5)$$

$$c'(0,1)=\tfrac{3}{4}*c(0,0.5)+\tfrac{1}{4}*c(0,2.5)$$

$$c'(2,1)=\tfrac{3}{4}*c(2,0.5)+\tfrac{1}{4}*c(2,2.5)$$

$$c'(4,1)=\tfrac{3}{4}*c(4,0.5)+\tfrac{1}{4}*c(4,2.5)$$

$$c'(0,2)=\tfrac{3}{4}*c(0,2.5)+\tfrac{1}{4}*c(0,0.5)$$

$$c'(2,2)=\tfrac{3}{4}*c(2,2.5)+\tfrac{1}{4}*c(2,0.5)$$

$$c'(4,2)=\tfrac{3}{4}*c(4,2.5)+\tfrac{1}{4}*c(4,0.5)$$

$$c'(\mathrm{m,n})=\tfrac{3}{4}*c(m,n-0.5)+\tfrac{1}{4}*c(m,n+1.5)\text{for n=odd}$$

$$c'(\mathrm{m,n})=\tfrac{3}{4}*c(m,n+0.5)+\tfrac{1}{4}*c(m,n-1.5)\text{for n=even}$$

The second part of this YUV420 to YUV444 conversion, as shown in FIG. **14***b*, up-samples the YUV422 data from part one above to YUV444. This conversion uses the following equations:

$$c'(0,0)=c(0,0)$$

$$c'(1,0)=\tfrac{1}{2}*c(0,0)+\tfrac{1}{2}*c(2,0)$$

$$c'(2,0)=c(2,0)$$

$$c'(3,0)=\tfrac{1}{2}*c(2,0)+\tfrac{1}{2}*c(4,0)$$

$$c'(m,n)=c(m,n)m \text{ is odd}$$

$$c(m,n)=\tfrac{1}{2}*c(m-1,n)+\tfrac{1}{2}*c(m+1,n)m \text{ is even}$$

YcbCr (4:4:4) to RGB Conversion

MPEG2 operates in YCbCr (YUV) color space. This conversion can be used to convert the YUV data to RGB data during copy out. The following equations are used for this conversions:

$$R=1.164(Y-16)+1.596(Cr-128)$$

$$G=1.164(Y-16)-0.813(Cr-128)-0.391(Cb-128)$$

$$B=1.164(Y-16)+2.018(Cb-128)$$

Four pixels in a scan-line are converted in one cycle.

Example Copy Out Commands

The EFB source and destination of the display copy operation is specified using an exemplary API function as follows:

GXCopyFBToDisplay

Argument:

u16	SrcLeft	//Upper-Left coordinate of the source rectangle
u16	SrcTop	
u16	SrcWidth	//Width, in pixels, of the source rectangle
u16	SrcHeight	//Height, in pixels, of the source rectangle
Void*	DstBase	//Address of destination buffer in memory
u16	DstStride	//Stride, in multiple of 32B, of destination buffer
GXBool	Clear	//enable clearing color and Z frame buffers

This function copies the contents of the embedded frame buffer (EFB) to the display buffer **113** in main memory. By the term "copy out" we don't mean simply a transfer of all the information; rather, we mean that the contents of the embedded frame buffer are read out, further processed (e.g., filtered, resampled, scaled, etc.) and that the resulting data is then sent elsewhere (e.g., to an external point sample type frame buffer). The origin of the rectangle is defined by SrcLeft(X) and SrcTop(Y). The Clear flag enables clearing of the color and z buffer to the current clear color and z values. The clearing of the embedded frame buffer preferably occurs simultaneously with the copy operation.

The following exemplary function can be used to set controls for the copy operations:

GXSetCopyControl

Arguments:

GXFbClamps	ClampFlags;	//Clamping flags for framebuffer filtering.
GXTexFormats	TexFormat;	//Format of texture (i.e. destination) pixels.
GXFbInterlace	Interlaced;	//Display buffer is interlaced (YUV422).
GXGamma	Gamma;	//Gamma correction on display buffer pixels.
u16	VertScale;	//vertical 1/scale value (1.8 format).
GXBool	MipFilter;	//Apply mipmap filter (texture copy only).

This function sets the controls used during copy from the embedded frame buffer to the display buffer. These controls are set once and then multiple copy commands can be issued.

The following is an exemplary API command for copying data out of the embedded frame buffer as a texture:

GXCopyFBToTexture

Argument:

u16	SrcLeft	//Upper-Left coordinates of the source rectangle.
u16	SrcTop;	
u16	SrcWidth;	//Width, in pixels, of the source.
u16	SrcHeight;	//Height, in pixels, of the source rectangle.
void*	DstBase;	//Address of destination buffer in memory (32 B aligned).
u16	DstStride;	//Stride, in multiple of 32 B, of destination buffer.
GXBool	Clear;	//Enable clearing color and z framebuffers.

This function copies the embedded frame buffer to a texture image buffer in main memory in order to generate texture images for subsequent use by the graphics pipeline.

The following lists exemplary parameters that can be designated using the exemplary API commands above:

GXFbClamps:

GX_CLAMP_TOP,	//Clamp top edge of image for filtering.
GX_CLAMP_BOTTOM,	//Clamp bottom edge of image for filtering.

GXFbInterlace:

GX_INTLC_OFF	//Interlace is off.
GX_INTLC_EVEN	//Interlace even lines.
GX_INTLC_ODD	//Interlace odd lines.

GXZCmprFormats:

GX_ZC_LINEAR,	//Linear 16 bit z. No compression.
GX_ZC_14E2	//14e2 floating point format.
GX_ZC_13E3	//13e3 floating point format.

GXGamma:

GX_GM_1_0	//Gamma 1.0
GX_GM_1_7	//Gamma 1.7
GX_GM_2_2	//Gamma 2.2

GXTexFormats:

GX_TF_I4	//Intensity 4 bits
GX_TF_I8	//Intensity 8 bits
GX_TF_IA4	//Intensity-Alpha 8 bit (44)
GX_TF_IA8	//Intensity-Alpha 16 bit (88)
GX_TF_C4	//Color Index 4 bit
GX_TF_C8	//Color Index 8 bit
GX_TF_CA4	//Color Index + Alpha 8 bit (44)
GX_TF_C6A2	//Color Index + Alpha 8 bit (62)
GX_TF_CA8	//Color Index + Alpha 16 bit (88)
GX_TF_R5G6B5	//RGB 16 bit (565)
GX_TF_RGB5A1	//RGB 16 bit (5551)

-continued

GX_TF_RGBA8	//RGB 32 bit (8888)
GX_TF_CMPR	//Compressed 4 bits/texel. RGB8A1.

GXPixelFormats:

GX_PF_RGB8_Z24	
GX_PF_RGBA6_Z24	
GX_PF_RGB565_Z16	
GX_PF_Z24	//used for z buffer copy (diagnostics only)
GX_PF_Y8	
GX_PF_U8	
GX_PF_V8	
GX_PF_YUV420	//used for YUV copy.

Example Pixel Engine Registers

FIGS. **15**–**17** show exemplary registers used by the pixel engine in connection with the copy out operations. Specifically, FIG. **15** shows an exemplary control register. The bit definitions for this exemplary control register are as follows:

Control Register Bits:

2:0	pixtype 000: RGB8/Z24 001:RGBA6/Z24 010: RGB_AA/Z16 011:Z (for copying Z buffer as texture 100: Y8 or U8 or V8 101: YUV 420 (only used for copy operation)	5:3 zcmode	000: linear z compression for 16 bit Z 001: 14e2 z compression for 16 bit Z 010: 13e3 z compression for 16 bit Z 011: 12e4 z compression for 16 bit Z 100: inverted_linear z compression for 16 bit Z 101: inverted_14e2 z compression for 16 bit Z 110: inverted_13e3 z compression for 16 bit Z 111: inverted_12e4 z compression for 16 bit Z
		6: ztop	0: z at the end of the pipe 1: z buffering before texture mapping

Bits **0**–**2** designate the pixel type for the copy operation. Writing to this control register causes the graphics pipe stages between the edge rasterizer (RAS0) and the pixel engine (PE) to be flushed. In this example, this will can take a minimum of 90 cycles. Writing to this register can also be used to sync up copy texture with rendering a primitive that uses the texture.

FIG. **16** shows an exemplary register for the copy to texture operation. The bit definitions for this exemplary register are as follows:

Texture Copy Register Bits:

1:0	src_clamp x1:clamp top 1x:clamp bottom						
2	color conversion 0:no color conversion 1:convert RGB to YUV						
6:3	tex_format						
pixtype: rgb8,rgba6,rgb_aa	yuv8	yuv8	yuv8	yuv420	yuv420	z	
yuvsel: x	x	Y	U	V	x	x	x
ccv_mode: OFF	ON	OFF	OFF	OFF	OFF	ON	OFF
0000:R4	Y4	Y4	U4	V4	Y4	R4	z[23:20]
0001:R8	Y8	Y8	U8	V8	Y8	R8	z[23:16]
0010:RA4	YA4	YA4	UA4	VA4	YA4	RA4	
0011:RA8	YA8	YA8	UA8	VA8	YA8	RA8	
0100:R5G6B5	Y5U6V5	Y5Y6Y5	U5U6U5	V5V6V5	Y5Y6Y5	R5R6B5	
0101:RGB5A3	YUV5A3	YYY5A3	UUU5A3	VVV5A3	YUV5A3	RGB5A3	

-continued

0110:RGBA8	YUVA8	YYYA8	UUUA8	VVVA8	YUVA8	RGVA8	z[23:00],0×ff
0111:A8	A8	0×ff	0×ff	0×ff	0×ff	0×ff	0×ff
1000:R8	Y8	Y8	U8	V8	Y8	R8	z[23:16]
1001:G8	U8	Y8	U8	V8	U8	G8	z[15:08]
1010:B8	V8	Y8	U8	V8	V8	B8	z[07:00]
1011:RG8	YU8	YY8	UU8	VV8	YU8	RG8	z[23:16]
		(red as intensity and Green as alpha)					
1100 GB8	UV8	YY8	UU8	VV8	UV8	GB8	z[15:00]

8:7 gamma (only when arc_format is any of the RGB formats)

00: gamma=1.0
01: gamma=1.7
10: gamma=2.2
11: reserved

9: mip_map_filter

0: no filtering (1:1)
1: box filtering (2:1)

11: clr (should be set to 0 for rgb_aa)

0: do not clear Z and Color efb
1: clear Z and color efb

13:12 intlc

00: progressive
01: reserved
10: interlaced (even lines)
11: interlaced (odd lines)

16:15 ccv_mode

0x: automatic color conversion, based on pixtype and texture format
10: color conversion off (rgb to yuv)
11: color conversion on (rgb to yuv)

The pixel types allowed for this operation are RGB8, RGBA6, RGB_AA (i.e. anti-aliasing (R5G6B5)), YUV8 and YUV420. Bits **3**–**6** determine the format of the texture stored by the copy command in texture buffer. In this example, this texture formatting is done in the texture format section **640** shown in FIG. **12**. In this example, Clr is not supported for pixel type YUV420 and should be set to 0. Gamma correction is also not supported for pixel type YUV420 in this example.

FIG. **17** shows an exemplary register for the copy to display operation. The bit definitions for this exemplary register are as follows:

Display Copy Register Bits:

1:0 src_clamp	10:scen
x1: clamp top	0: no vertical scaling
1x: clamp bottom	1: vertical scaling
	11:clr (should be set to zero for rgb_aa)
8:7 gamma (only when src_format is any of the RGB formats)	0: do not clear Z and Color efb
00: gamma = 1.0	1: clear Z and color efb
01: gamma = 1.7	13: 12 intlc
10: gamma = 2.2	00: progressive
11: reserved	01: reserved
	10: interlaced (even lines)
	11: interlaced (odd lines)

The pixel types allowed for this operation are RGB8, RGBA6, RGB_AA (anti-aliasing) and YUV420. Clr is not supported for pixel type YUV420 and should be set to 0. Gamma correction is also not supported for pixel type YUV420 in this example.

Other Example Compatible Implementations

Certain of the above-described system components **50** could be implemented as other than the home video game console configuration described above. For example, one could run graphics application or other software written for system **50** on a platform with a different configuration that emulates system **50** or is otherwise compatible with it. If the other platform can successfully emulate, simulate and/or provide some or all of the hardware and software resources of system **50**, then the other platform will be able to successfully execute the software.

As one example, an emulator may provide a hardware and/or software configuration (platform) that is different from the hardware and/or software configuration (platform) of system **50**. The emulator system might include software and/or hardware components that emulate or simulate some or all of hardware and/or software components of the system for which the application software was written. For example, the emulator system could comprise a general purpose digital computer such as a personal computer, which executes a software emulator program that simulates the hardware and/or firmware of system **50**.

Some general purpose digital computers (e.g., IBM or MacIntosh personal computers and compatibles) are now equipped with 3D graphics cards that provide 3D graphics pipelines compliant with DirectX or other standard 3D graphics command APIs. They may also be equipped with stereophonic sound cards that provide high quality stereophonic sound based on a standard set of sound commands. Such multimedia-hardware-equipped personal computers running emulator software may have sufficient performance to approximate the graphics and sound performance of system **50**. Emulator software controls the hardware resources on the personal computer platform to simulate the processing, 3D graphics, sound, peripheral and other capabilities of the home video game console platform for which the game programmer wrote the game software.

FIG. **18**A illustrates an example overall emulation process using a host platform **1201**, an emulator component **1303**, and a game software executable binary image provided on a storage medium **62**. Host **1201** may be a general or special purpose digital computing device such as, for example, a personal computer, a video game console, or any other platform with sufficient computing power. Emulator **1303** may be software and/or hardware that runs on host platform **1201**, and provides a real-time conversion of commands, data and other information from storage medium **62** into a form that can be processed by host **1201**. For example, emulator **1303** fetches "source" binary-image program instructions intended for execution by system **50** from

storage medium **62** and converts these program instructions to a target format that can be executed or otherwise processed by host **1201**.

As one example, in the case where the software is written for execution on a platform using an IBM PowerPC or other specific processor and the host **1201** is a personal computer using a different (e.g., Intel) processor, emulator **1303** fetches one or a sequence of binary-image program instructions from storage medium **62** and converts these program instructions to one or more equivalent Intel binary-image program instructions. The emulator **1303** also fetches and/or generates graphics commands and audio commands intended for processing by the graphics and audio processor **114**, and converts these commands into a format or formats that can be processed by hardware and/or software graphics and audio processing resources available on host **1201**. As one example, emulator **1303** may convert these commands into commands that can be processed by specific graphics and/or or sound hardware of the host **1201** (e.g., using standard DirectX, OpenGL and/or sound APIs).

An emulator **1303** used to provide some or all of the features of the video game system described above may also be provided with a graphic user interface (GUI) that simplifies or automates the selection of various options and screen modes for games run using the emulator. In one example, such an emulator **1303** may further include enhanced functionality as compared with the host platform for which the software was originally intended.

FIG. **18**B illustrates an emulation host system **1201** suitable for use with emulator **1303**. System **1201** includes a processing unit **1203** and a system memory **1205**. A system bus **1207** couples various system components including system memory **1205** to processing unit **1203**. System bus **1207** may be any of several types of bus structures including a memory bus or memory controller, a peripheral bus, and a local bus using any of a variety of bus architectures. System memory **1207** includes read only memory (ROM) **1252** and random access memory (RAM) **1254**. A basic input/output system (BIOS) **1256**, containing the basic routines that help to transfer information between elements within personal computer system **1201**, such as during start-up, is stored in the ROM **1252**.

System **1201** further includes various drives and associated computer-readable media. A hard disk drive **1209** reads from and writes to a (typically fixed) magnetic hard disk **1211**. An additional (possible optional) magnetic disk drive **1213** reads from and writes to a removable "floppy" or other magnetic disk **1215**. An optical disk drive **1217** reads from and, in some configurations, writes to a removable optical disk **1219** such as a CD ROM or other optical media. Hard disk drive **1209** and optical disk drive **1217** are connected to system bus **1207** by a hard disk drive interface **1221** and an optical drive interface **1225**, respectively. The drives and their associated computer-readable media provide nonvolatile storage of computer-readable instructions, data structures, program modules, game programs and other data for personal computer system **1201**. In other configurations, other types of computer-readable media that can store data that is accessible by a computer (e.g., magnetic cassettes, flash memory cards, digital video disks, Bernoulli cartridges, random access memories (RAMs), read only memories (ROMs) and the like) may also be used.

A number of program modules including emulator **1303** may be stored on the hard disk **1211**, removable magnetic disk **1215**, optical disk **1219** and/or the ROM **1252** and/or the RAM **1254** of system memory **1205**. Such program modules may include an operating system providing graphics and sound APIs, one or more application programs, other program modules, program data and game data. A user may enter commands and information into personal computer system **1201** through input devices such as a keyboard **1227**, pointing device **1229**, microphones, joysticks, game controllers, satellite dishes, scanners, or the like. These and other input devices can be connected to processing unit **1203** through a serial port interface **1231** that is coupled to system bus **1207**, but may be connected by other interfaces, such as a parallel port, game port Fire wire bus or a universal serial bus (USB). A monitor **1233** or other type of display device is also connected to system bus **1207** via an interface, such as a video adapter **1235**.

System **1201** may also include a modem **1154** or other network interface means for establishing communications over a network **1152** such as the Internet. Modem **1154**, which may be internal or external, is connected to system bus **123** via serial port interface **1231**. A network interface **1156** may also be provided for allowing system **1201** to communicate with a remote computing device **1150** (e.g., another system **1201**) via a local area network **1158** (or such communication may be via wide area network **1152** or other communications path such as dial-up or other communications means). System **1201** will typically include other peripheral output devices, such as printers and other standard peripheral devices.

In one example, video adapter **1235** may include a 3D graphics pipeline chip set providing fast 3D graphics rendering in response to 3D graphics commands issued based on a standard 3D graphics application programmer interface such as Microsoft's DirectX 7.0 or other version. A set of stereo loudspeakers **1237** is also connected to system bus **1207** via a sound generating interface such as a conventional "sound card" providing hardware and embedded software support for generating high quality stereophonic sound based on sound commands provided by bus **1207**. These hardware capabilities allow system **1201** to provide sufficient graphics and sound speed performance to play software stored in storage medium **62**.

While the invention has been described in connection with what is presently considered to be the most practical and preferred embodiment, it is to be understood that the invention is not to be limited to the disclosed embodiment, but on the contrary, is intended to cover various modifications and equivalent arrangements included within the scope of the appended claims.

We claim:

1. A method of reducing an amount of storage space required for storing image data in main memory in a graphics processing system while increasing main memory bandwidth when displaying image data from a frame buffer located in said main memory, said graphics processing system including a graphics processing chip having an embedded first frame buffer memory and a separate non-embedded second frame buffer in a main memory provided separate from said graphics processing chip, comprising:

storing RGB format image data in said first embedded frame buffer on the graphics processing chip;

initiating a copy out operation for reading out said image data from the first embedded frame buffer and transferring image data to the separate non-embedded second frame buffer located in the main memory of the graphics processing system;

converting said image data from an RGB format to a YUV display format during the copy out operation after reading out said image data from the embedded first

frame buffer and prior to writing said image data to the non-embedded second frame buffer; and

writing the converted image data to the non-embedded second frame buffer located in the main memory of the graphics system, wherein a total amount of memory storage space occupied by said converted image data in said second frame buffer is less than an amount of memory storage space occupied by said RGB format image data in said first frame buffer, and wherein main memory bandwidth is increased when displaying image data from said second frame buffer.

2. The method of claim **1** wherein the YUV display format is a YUV 4:2:2 format.

3. The method of claim **1**, further including performing a scaling operation on the data prior to writing the data to the main memory of the graphics system.

4. The method of claim **1**, further including performing a gamma correction operation on the data prior to writing the data to the main memory of the graphics system.

5. The method of claim **1**, further including performing an anti-aliasing operation on the data prior to converting the image data to YUV format and writing the image data to the frame buffer located in main memory of the graphics system.

6. The method of claim **1** further including performing a de-flickering operation on the data prior to converting the image data to YUV format and writing the image data to the external frame buffer in main memory of the graphics system.

7. The graphics system of claim **1** wherein four pixels in a scan-line are converted in one clock cycle.

8. A graphics system including a main processor, an associated graphics system main memory and a separate graphics coprocessor chip having graphics processing pipeline circuitry and an on-chip embedded frame buffer memory, said graphics system main memory being separate memory that is not embedded on a same graphics coprocessor chip as graphics processing pipeline circuitry, comprising:

a programmable pixel data post-processing copy-out pipeline that selectively converts pixel data from one image format to another during a reading and transfer of the data from the embedded frame buffer to the separate non-embedded main memory of said graphics system, wherein the copy-out pipeline is operable to selectively transfer the data to either a display buffer area or a texture buffer area within said separate non-embedded main memory and wherein the copy-out pipeline converts the data to a display format if the data is transferred to the display buffer area and converts the data to a texture format if the data is transferred to the texture buffer area.

9. The graphics system of claim **8**, wherein the graphics coprocessor further includes a graphics pipeline, and wherein the graphics pipeline is operable to use data copied out to the main memory texture buffer area in a subsequent rendering process.

10. The graphics system of claim **8**, wherein the embedded frame buffer may be programmably configured to store pixel data in either RGB color format or YUV color format.

11. The graphics system of claim **8**, wherein the copy-out pipeline selectively converts the data from the embedded frame buffer to either a YUV display format or an RGB texture format during a copy out of pixel data to the external frame buffer in main memory.

12. The graphic system of claim **11**, wherein the copy-out pipeline converts the pixel data to a YUV display format when the copy-out pipeline is operated to transfer the pixel data to said display buffer area.

13. The graphics system of claim **8** wherein said programmable pixel data post-processing copy-out pipeline comprises:

a programmable pixel filter section said programmable pixel filter being selectively operable in either an antialias mode or a deflicker mode;

a gamma correction section, said gamma correction section providing a predetermined correction to pixel color valves; and

an RGB to YUV conversion section.

14. The graphics system of claim **13** wherein said programmable filter comprises a programmable 7-tap vertical filter.

15. The graphics system of claim **8** wherein said programmable pixel data post-processing copy-out pipeline comprises:

a Y-scale section for performing a vertical scaling of pixel data when the copy-out pipeline is operated to transfer the pixel data to said display buffer area.

16. The graphics system of claim **8** wherein said programmable pixel data post processing copy-out pipeline comprises:

a texture format section for converting pixel data to a predetermined texture data format and organizing the converted data into a plurality of texture tiles.

17. The graphics system of claim **8** wherein the selected sub-region of pixels in the embedded frame buffer contains MPEG data for creating streaming video images for superimposing as texture on a rendered graphic object.

18. In a graphics system including a main processor and a pipelined architecture graphics coprocessor having an embedded frame buffer memory, the embedded frame buffer memory instantiated on a same semiconductor chip substrate as at least a portion of a graphics processing pipeline, and an external texture buffer residing within a main memory of said graphics system, said main memory being configured on one or more semiconductor chips separate from a semiconductor chip containing said graphics processing pipeline, a pixel data copy-out process for copying pixel data from said embedded frame buffer memory to said external texture buffer wherein said copy-out process performs predetermined pixel data conversion and/or filtering operations during transferring of pixel data from said embedded frame buffer to said external texture buffer, comprising:

selecting a sub-region of pixels in the embedded frame buffer as a source for a pixel data copy operation;

selecting a destination in the external texture buffer in said main memory for the pixel data copy operation; and

creating texture tiles within said external texture buffer by converting a selected rectangular sub-region of pixels from a display data format to one of a plurality of texture data formats during a pixel data transfer operation of pixel data from said embedded frame buffer to said external texture buffer.

* * * * *